HOST STATION MANUAL

PHOENIX MODEL MARKET
A TEST BED FOR NEXT GENERATION TV SERVICES

On behalf of Pearl TV and the Phoenix Model Market Project for the Broadcast Television Industry

Contents

GETTING STARTED

GETTING STARTED

Getting Started

The following section describes what is required to begin the process for your station and market to plan, license, build and operate a NextGen TV Lighthouse facility.

GETTING STARTED

Background and Goals

This manual is for television stations and markets that intend to make the transition to ATSC-3 NextGen TV and want to consider what is required to build and operate a NextGen TV facility. Although this manual cannot possibly include everything that needs to be considered or suggest all possible solutions, it should provide a set of guidelines that will make the process of planning, licensing, building and operating a NextGen TV facility easier to understand. Every market is different and will have different nuances and circumstances.

To accomplish a relatively seamless implementation of NextGen TV without disenfranchising your viewers, your station in concert with willing market partners can deploy this new technology in parallel with its existing digital television services in a voluntary manner. The NextGen TV transmissions must operate within a given market's existing 6 MHz television channels and will be subject to the same radio frequency interference constraints and requirements that apply to the current DTV standard. In other words, this transition must be accomplished on a voluntary basis without additional spectrum being provided to the broadcaster that does not already exist in the market.

As for content, the current FCC rules regarding simultaneous carriage during the transition requires that the programming must be substantially the same for now. However, parallel transmission of the NextGen TV content can make use of many of the enhancements found in the new standard such a UHD and HDR video, immersive audio as well as broadcaster applications while still meeting regulatory requirements.

This manual will provide the reader with many of the basic operational principles for how to successfully transition to NextGen TV as quickly as possible. It should also answer many of the questions you might have while providing the basis for taking advantage of this next great broadcasting television opportunity

GETTING STARTED

Sharing Channels to Clear Spectrum

Since the Report and Order issued by the FCC in November of 2017 (FCC 17-158) *Authorizing Permissive Use of the "Next Generation" Broadcast Television Standard* as well as the applicable rules shown in the Reference Section of this manual does not provide for any additional bandwidth (channels) in markets to aid in the transition, each market must find a means to transmit the NextGen TV service while retaining their current legacy digital services.

There is no single method to accomplish that successfully in all markets, but there is an approach that is applicable in many, if not most markets. This will require extraordinary coordination with the stations involved that likely have been fierce market competitors. However, the greater good is the improved service provided to all their viewers as well the continued health of television broadcasting as a business.

To help in the coordination and focus the leadership required in accomplishing this daunting task in the shortest amount of time, each market should consider obtaining the services of a market coordination manager. This person should be used to help draft and negotiate with the aid of legal counsel technical and business proposals for willing partners to join forces in finding a home for a hosting station's legacy digital services. This person can also be the focus in insuring all the various carriage agreements are created and transmission rights are obtained. A local market partnership can also act as governance and a. holding entity for any joint assets that may be required. It also provides a vehicle to share any joint operating costs. This partnership agreement must also protect equally the business interests of all the participating stations

TWO STEP PROCESS

Making the NextGen TV available in any given market requires two major steps. The two steps are interlocked but have separate paths. Hopefully, what is required to accomplish both steps are described adequately below and can be applied to the specific circumstances of your market.

STEP ONE - CLEARING SPECTRUM

Optimizing Legacy ATSC 1.0 Signals to Improve Overall Market Spectrum Capacity

As part of the first step to enable a transition to a NextGen TV, market stations must optimize and clear their current spectrum to provide capacity to accommodate a host channel for the NextGen TV services while maintaining their current legacy services. To help make that happen, each station must look at how efficiently they are making use of their own legacy ATSC-1 spectrum.

Any spectrum they can clear may help in hosting current services (from other broadcasters) and thus clear the channel(s) required for the NextGen TV services.

Great strides have been made in legacy ATSC-1 encoding technology in the twenty plus years since the current digital video standard was developed. These improvements provide for better image quality with less required digital bandwidth. This translates into less digital capacity required in any current channel in transmitting the same or better-quality services. This is true even if the channel is occupied with HD as well as multicast services.

With the aid of updated encoding, a station may have enough capacity to host a legacy multicast signal from the NextGen TV host or other market station. The use of PSIP (Program and System Information Protocol) that currently resides within the legacy ATSC-1 signal provides the legacy station's logical identity to all over-the-air viewer receivers. The proper use of PSIP will ensure that the viewers will be able to find their favorite services by the same virtual channel number despite the possibility that the service has been moved to a different physical channel. This ability to move services to channels with spare capacity without audience disruption is the very basis of how the transition can be accomplished without additional bandwidth in many markets.

The end goal is to free the capacity of at least one channel (possibly more in a larger market) to provide space for all the new NextGen TV services. Fortunately, the new NextGen TV services require less bandwidth per service, so depending on service requirements (image quality and coverage) five or more current HD services with similar coverage and image quality are possible within a 6 MHz channel.

You will note that in the before and after figures shown below for example, that some multicast ATSC-1 services have been moved to other channels as have the primary HD service of the host station. However, as mentioned, the services are still identified as they were on their original source channel using the logical service numbering provided in their PSIP tables. Therefore, after the market rescans all receivers, the services will appear as they did to the over-the-air audience.

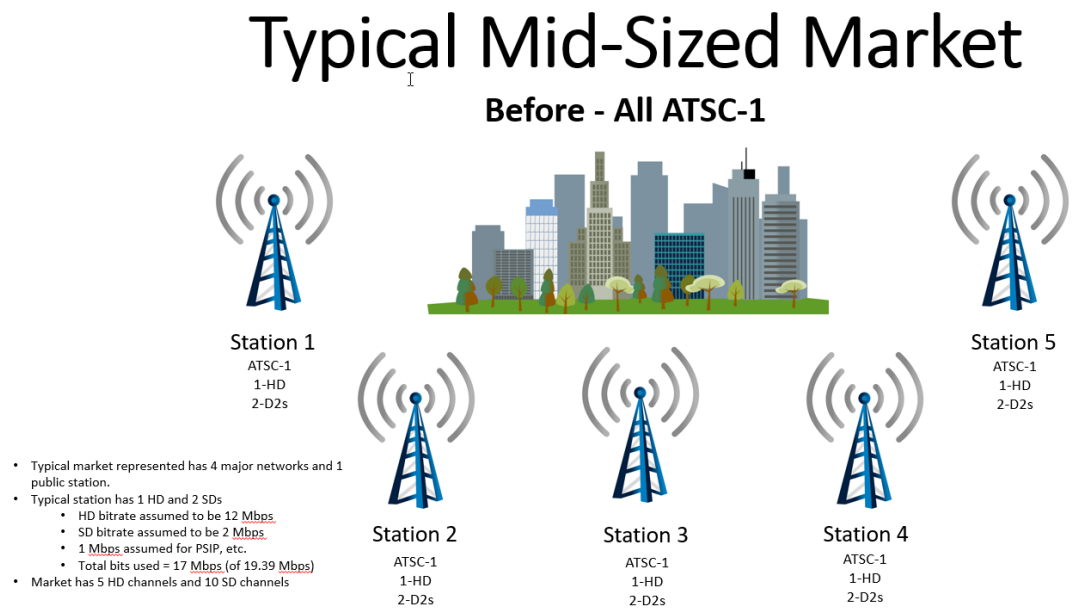

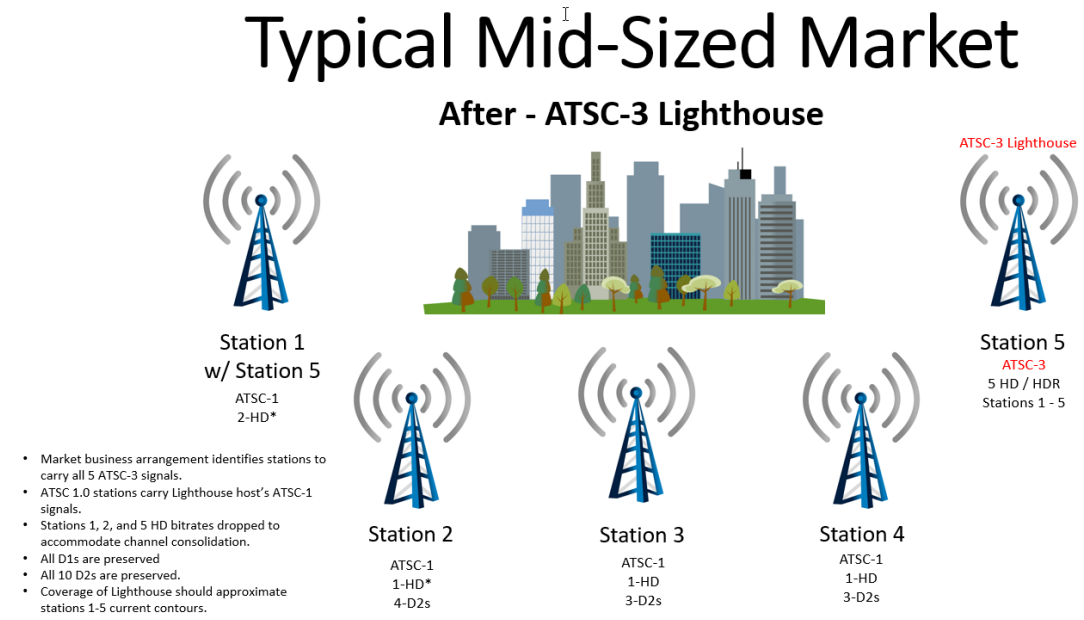

The FCC Report and Order and Further Notice of Proposed Rulemaking 17-158-A1, adopted on November 16, 2017 Authorizing Permissive Use of the "Next Generation" Broadcast Television Standard Television service does require many obligations of the parties that will share bandwidth to make this transition possible.

GETTING STARTED

First and foremost, if a station's legacy ATSC-1 primary signal is moved to share on another station, that facility must provide coverage that is substantially the same as the original station's transmission coverage within its designated contours. The FCC will likely accept a loss of coverage of up to 5 percent of the population of the market audience within the noise limited contour but may not look favorably on waiver requests that describe a larger loss in audience.

Current coverage patterns in many markets are roughly equivalent (but not necessarily equal) so finding a suitable host should likely be easy. However, some markets have coverages that overlap but do not replicate each other. In those specific cases, it will be challenging to find a host station that could be served by a legacy signal partner and replicate 95% of the original coverage. The FCC has not closed the possibility of a special waiver in those cases.

However, the NextGen TV services are given more leeway in their requirements for duplication of coverage. The NextGen TV coverage need not duplicate current legacy services. However, there is a requirement for the primary simulcast NextGen TV service to be "free" as well as provide programing content that is substantially the same as the primary legacy service.

Inventory of Service Capacity in a Market

As part of the first step the market coordinator needs to take an inventory of the current available bandwidth of each station in a market. Potential excess bandwidth capacity needs to be evaluated while considering efficiencies at hosting stations that may be provided by any improvements in encoding and statistical multiplexing.

For example, ideally the displaced legacy services from the future Lighthouse host station would be accommodated by the other market transition participants. This may require the displacement or reordering of several individual multicasts from the host station as well as the other participants to make room for the host station's main legacy HD telecast.

Also, and maybe most importantly market partners that either own duopolies or share facilities in service agreements may find spectrum clearing easier to accomplish.

However, through market-wide planning and the clever use of the station's identifying PSIP signal, the identities of the individual services will remain despite being moved to other channels after a market wide rescan of all the over-the-air viewer's receivers.

Market-wide MVPD coordination is also particularly important. Despite many market stations feeding their signal to cable head-ends via means other than over-the-air, often MVPDs still use the over-the-air signal as a backup. Therefore, as these legacy services are moved, careful coordination with cable and direct broadcast satellite operations is critical. It is also required under the NextGen TV FCC rule for MVPDs to be notified 120 days in advance of any such a move.

MVPD representatives have informed us that even with 120 days of notification, the changes they require are difficult within that time period.

Said in another manner, how the station's signals are switched and identified inside MVPD facilities is quite complex, so they must receive as much advance notice as practical to ensure they have the facilities required to cope with the transition. In many markets MVPDs provide over 70% of the viewing audience or more, so this detail is critical in successful market planning.

In the end, the goal is to clear the current legacy (ATSC-1) digital services from a host channel. When a complete channel is cleared, after licensing, clearing the appropriate rights and building NextGen TV facilities, the cleared spectrum provides the means of transmission of NextGen TV Services by the sharing partners.

This spectrum clearing will require extraordinary local coordination. The main HD service as well as the multicasts from the host station are likely to be carried on different channels of the willing partners stations. As mentioned, the use of PSIP provides the legacy station's logical identity to all receivers will be used to ensure that the viewers will be able to find their favorite services by the same virtual channel number despite the service being moved to a different physical channel. This sounds too simple to be true, but it does work in practice.

Having your signal transmitted by another station requires a carriage agreement between the parties and must be attested to in the license modification application procedure. This is one of the items that needs to be coordinated. The networks and content producers supplying the programming for the services will also need to provide their written permission as well for these changes.

Part of the local coordination effort needs to be determining how the various legacy streams will get from the Lighthouse host station that is clearing its spectrum to the stations that will provide spectrum for their use. If the partner stations happen to share a common facility (as in a duopoly or stations with shared services) then likely that is not a problem. However, in alternative cases there are very cost-effective ways that video and audio services can be delivered using both public and private facilities. These facilities use local fiber, Internet or microwave. No one size will fit every circumstance.

In all cases, television broadcasting is the best platform to provide notifications to its viewers via its own promotional platform for these changes when they occur, and a market rescan is called for. No other media provides a better platform to inform their audience about an impending change in a market. If done properly with enough advance notice, there should be little if any market disruption. If this can be done in coordination with a market incentive auction repack, there is an opportunity to disrupt the market only once.

STEP TWO – BUILDING THE NEXTGEN TV SERVICES

Identifying Requirements for NextGen TV Services

The second step after working through the issues of clearing the spectrum is to see if there is enough capacity to establish NextGen TV services for all partner needs.

During the initial years of the NextGen TV transition broadcasters will need to share a common channel or channels. These will be known as "Lighthouses" since they will provide the incentive for the viewers to watch the new services. Each broadcast partner in the NextGen TV Lighthouse will hopefully (but are not required to) be able to replicate its legacy coverage with a minimum transmission S/N of 15.5 dB if appropriate modulation and coding characteristics are selected. If those characteristics are used, you can expect the usable digital bandwidth in a single NextGen TV RF channel to about 25 or 26 Mb/sec.

At the same time, it is likely that most broadcasters will require NextGen TV scan rate and image qualities at least equal to and hopefully better that their current legacy simulcast ATSC-1 digital service. In practice this can be achieved using about 4 to 5 or so Mb/sec per stream in HEVC, preferably, variable bit rate, while utilizing statistical multiplexing. These rates are consistent with rules-of-thumb that H265, HEVC video encoding is about 4 times more efficient than MPEG-2 used currently in ATSC-1.

Using this general rule of thumb, a single standard RF channel can easily accommodate 4 to 5 or more 1080P HD progressive scanned NextGen TV services because of the greatly improved efficiency of its more modern encoding. Said in another way, 4 or 5 partners can be accommodated with their primary services in a single 6 MHz channel with about the same market coverage as their legacy services.

Additionally, the enabling FCC rule requires the simulcast NextGen TV primary services must also be substantially the same as the legacy transmission in terms of program content. Small items such as commercials or promotional messages can be different, but the overall programming must be the same. The resolution and technical features of the services are permitted to be different (as in resolution, high dynamic range or possibly audio channels) but otherwise should be substantially the same in program content as the station's legacy transmission.

Coverage and Service Considerations

As mentioned, the FCC in its NextGen TV Report and Order imposes two requirements regarding coverage during this simulcast period. First, the shared facilities of where the host legacy ATSC-1 signal resides must replicate 95% of its original coverage. That is so the audience for the current

ATSC-1 signal of the host station is not significantly impaired. However, no such requirements are placed on the new NextGen TV service for equal coverage.

Secondly, any station that chooses to simulcast in the NextGen TV Lighthouse must simulcast substantially the same content as the primary service of that station if transmitting in the NextGen TV format. It would also be likely that any broadcaster would want to replicate the coverage area in the new service of their original legacy service. Equal coverage is something we should all strive for, so the new service is not considered a service of less quality.

Although some requirements are mandated by FCC rule, it is also what any responsible broadcaster would want. Broadcasters always want to retain or grow their audience while providing a quality of signal that is at least as good, if not better than the previous service.

Host and Tenant Considerations

As mentioned earlier, when market partnerships are crafted as part of that process there needs to also be a series of Channel Sharing (Carriage) Agreements created to allow for the displaced services from the host and other stations to meet the FCC requirements.

Also, there are several legal, content permission, FCC and capital ownership issues to be considered. Likely there will be separate agreements between the broadcasters involved as well as the required permissions from the networks and/or all the other content owners involved. Additionally, as with the repack, the cleared channel's service move must be authorized by the FCC.

As well, each partner must obtain FCC authorization for transmitting in NextGen TV. Luckily, there is a streamlined method for obtaining this authorization as provided in the FCC NextGen TV Report and Order and described later in this manual.

Lastly, as part of the partnership agreement there needs to be consideration about the ownership of all the equipment required to create the NextGen TV Lighthouse transmission. Some of the equipment will be unique to each station's use (as in the encoders). However, much of the equipment will be used in common (as in Route/Guide Building, Broadcast Gateway, Exciter, Transmitter, Transmission Line and Antenna).

Space leases, even at little or no cost are also likely to be a considered because often they include a term, liability assignment, use and free access rights.

Additionally, common site continuing costs will need to be considered in any agreement. There is power, rent, equipment maintenance and so forth to be included.

Shared NextGen TV Transmission Facilities.

The market partnership may decide that the transmitter, filter, transmission line and antenna originally used by the host station whose spectrum was cleared would provide an adequate facility particularly during the initial years of the transition. However, there are some other options that should or must be considered.

The new ATSC-3 NextGen TV standard has a higher peak to average power ratio than the current ATSC-1 DTV service. That sounds like daunting jargon, but what it means is that although there are similar power output requirements required of both the old and new services, there are transient power excursions in the new service that exceed what has been required in the past. This necessitates either reducing average power to allow for these transients in older transmitters or buying a transmitter that has been designed to deal with these larger transient (peak) requirements. No one size fits all in this case and the transmitter manufacturer is the best source of information about the capabilities of the legacy transmitter being used. Since transmitters are not built to the precise power levels required by the legacy hosting station, often there is already enough capacity built in. In fact, in many circumstances the transmitter is already over-sized.

Between the transmitter and the antenna in all current ATSC-1 transmission facilities is a filter. Often this filter will prove to be adequate for the new NextGen TV transmission, but the new service has more energy (power) at the edge of the channel. There is a concern if there is the possibility of adjacent channel interference either in-market or in a close-by market, this filter may require replacement with one with better (higher Q) edge rejection characteristics to protect the adjacent channel from interference. If adjacent channel interference is not an issue in the market, then the current filter is likely to be acceptable.

As for the antenna, generally all antennas are rated in their horizontal polarization characteristics for FCC licensing purposes. However, since the new NextGen TV service may provide opportunities for portable or mobile use, many broadcasters are considering replacing their antennas with units that have a small (let us say 25 to 30%) vertical polarization component. Since the FCC only considers horizontal component in their licensing, adding some vertical transmission capability requires replacement or modification of their antenna as well as requiring a corresponding amount of additional transmitter power to keep the horizontal power output the same. Roughly speaking, adding 30% vertical component via a different cross polarized antenna requires 30% more transmitter power.

The exciter used by the transmitter as well may need to be changed if it is more than a few years old. Newer (under 2 or 3 years old) exciters generally may be software upgraded to NextGen TV

service at a reduced cost as compared to replacing the complete exciter. You will need to check with its manufacturer.

The NextGen TV service has IP (Internet Protocol) as its major transport within the hosting facilities as well as at the transmitter. Therefore, if the Studio to Transmitter used to send the station's signal from the originating facility to the transmission site is not capable of IP transmission, it will need to be replaced with one so capable. Luckily, IP microwave and fiber facilities are used by many industries, so their costs reflect the scale of use.

The STL will be fed with a NextGen TV Broadcast Gateway/Scheduler. This device is the controlling system for proper transmission of the NextGen TV signal. It provides all the studio equipment's coordination, proper viewer receiver signaling and secure IP stream delivery to the exciter.

The Gateway/Scheduler is fed by the Route Encapsulator. This device takes the DASH segments from the DASH packager/encoders which contain the encoded video and audio streams and assigns these streams IP addresses that will be used by the viewer's receiver to make sure the various services are identified and displayed properly in the viewer's receiver. The Route Encapsulator is also the source of service signaling, non-real-time (NRT) file delivery to the receiver as in the service guide, broadcaster application and advanced alerting.

The Route Encapsulator is fed by the Packager which creates DASH video and audio segments (video and audio are sent in bursts of some seconds length) from the video and audio encoders (that work hand and hand with the packager)

Often statistical multiplexing is used with the audio and video streams to share the available bandwidth for these streams in the most efficient manner.

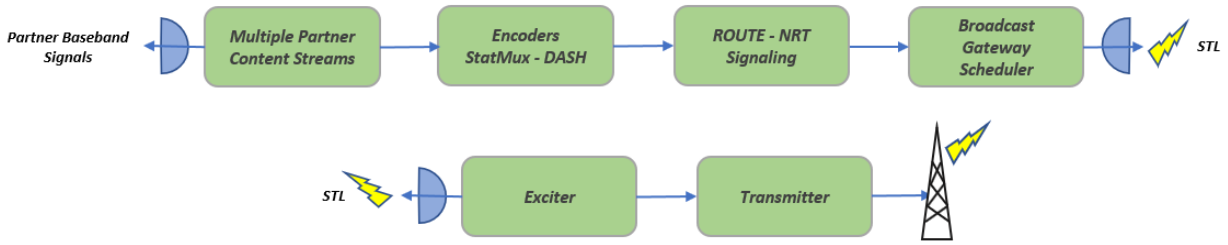

Getting the Services from the Partners to the NextGen TV Aggregation Facility

Each of the partner's services must be delivered from the partner's locations to the transmission aggregation location which likely is in the Lighthouse host's studio facilities. There are many ways in getting those legacy signals from the originating stations to the NextGen TV aggregation point.

The simplest and most cost-effective method in many markets is to just take the partner's signal off the air. The legacy signal is in digital format, so if the reception characteristics are good at the NextGen TV transmission location, this may be a cost-effective method to provide the signal.

Alternatively, there is often microwave or fiber using a private local facility or public (broadband) connectivity available. There is cost-effective equipment available with forward error correction for use in any of these scenarios that will deliver to the NextGen TV facility partner services with the best possible quality and reliability.

Single Frequency Network Considerations

While broadcasters are sharing facilities for NextGen TV, the use of a Single Frequency Networks is also possible. Since SFNs do not require additional bandwidth to operate within a market, they provide a potential solution for coverage issues in a market with spot coverage concerns or to provide better signal levels near the edge of the market coverage.

As with some of the equipment that would be required in a single Lighthouse transmission facility, a local agreement will need to be created to cover the design, installation, legal and equipment ownership costs. Additionally, there is likely to be ongoing operating costs associated with tower and land rent, power, support and connectivity.

Facilities are also being established that will provide SFN capabilities in markets as a service. Essentially, companies will provide the facilities within the market and provide the signal as a service to contracting individual stations or partnerships. These arrangements are not unlike those currently being provided in the two-way radio and other wireless services.

Any market partnership should consider the possibility of a future SFN while creating their initial partnership even if it is not required when the Lighthouse station is first placed on the air. Thinking ahead about this possibility, even if it is remote while the partnership agreement is created, removes a potential future barrier when the decision eventually needs to be made in earnest.

GETTING STARTED

Licensing

The FCC's Mass Media Bureau has provided a means to provide the authorizations required by making use of their web-based Licensing and Management System, also called LMS.

The Media Bureau has revised FCC Form 2100, Schedule B (full-service television stations), Schedule D (low-power and television translator stations), and Schedule F (Class A television stations), so that broadcasters may now file applications for modification of licences to authorise the transmission of NextGen TV broadcast signals.

All licensed full-power, Class A, low-power television (LPTV), and TV translator stations, except for licensed channel sharing stations, may also file for NextGen TV services as well. Currently, licenced channel shares that came about via the recent auction activity will need to wait in making a NextGen TV request. The FCC has announced that it is continuing to modify its LMS to accommodate NextGen TV license applications for channel sharing stations and will hopefully be able to accommodate those requests shortly.

It is important to understand that the procedure described is for modifications of current valid broadcast licenses only and do not follow the usual Construction Permit and Full Authorization route. As such, the new services cannot be moved and turned on until the authorization applications are approved.

The Media Bureau staff is committed to turn around these applications for modification quickly within 30 days or so.

There are six different circumstances that this modification application procedure covers. The broadcaster filing must pick from just one of the following:

- Converting an existing 1.0 facility to 3.0 service and identifying a 1.0 simulcast host.
- Identifying or changing 1.0 simulcast host station.
- Identifying or changing 3.0 host station.
- Discontinuing 3.0 guest service.
- Converting 3.0 facility back to 1.0 service.
- Discontinuing 1.0 simulcast service on a host station.

GETTING STARTED

The FCC Report and Order, Part 73 and 74 Rules and Public Notices governing NextGen TV are provided in the Reference section of this manual. It is suggested that the broadcaster should read the applicable rules and footnotes as some of the details are critical.

Currently, the FCC has suggested that if a market Lighthouse hosting facility is considering use of a Single Frequency Network to enhance its transmission that applying entity must apply for this authority before applying for the required authority to transmit the ATSC-3 signal. This request is not based on any technical or rule requirement, but on how FCC processes currently work.

Multichannel Video-Programming Distributors (MVPD)

The FCC's rules regarding the voluntary simulcast transmission of NextGen TV include an important requirement to notify all market MVPDs (Cable/DBS/IP operators) within the station's coverage area of the anticipated changes that will be made in the over-the-air virtual channels within their market coverage.

A definition of an MVPD is a cable operator, multichannel multipoint distribution service, a direct-broadcast satellite service, or a television receive-only satellite program distributor, who makes available for purchase, by subscribers or customers, multiple channels of video programming,

Here is the actual FCC rule requirement from 47 CFR 73.3801, the details of notification are important to note:

(h) Notice to MVPDs.

(1) NextGen TV stations relocating their ATSC 1.0 signals (e.g., moving to a temporary host station's facility, subsequently moving to a different host, or returning to its original facility) must provide notice to MVPDs that:

> (i) No longer will be required to carry the station's ATSC 1.0 signal due to the relocation; or
>
> (ii) Carry and will continue to be obligated to carry the station's ATSC 1.0 signal from the new location.

(2) The notice required by this section must contain the following information:

> (i) Date and time of any ATSC 1.0 channel changes;
>
> (ii) The ATSC 1.0 channel occupied by the station before and after commencement of local simulcasting;
>
> (iii) Modification, if any, to antenna position, location, or power levels;
>
> (iv) Stream identification information; and
>
> (v) Engineering staff contact information.

(3) If any of the information in paragraph (h)(2) of this section changes, an amended notification must be sent.

(4)

(i) NextGen TV stations must provide notice as required by this section:

(A) At least 120 days in advance of relocating their ATSC 1.0 signals if the relocation occurs during the post-incentive auction transition period; or

(B) At least 90 days in advance of relocating their ATSC 1.0 signals if the relocation occurs after the post-incentive auction transition period (see 47 CFR 27.

(ii) If the anticipated date of the ATSC 1.0 signal relocation changes, the station must send a further notice to affected MVPDs informing them of the new anticipated date.

(5) NextGen TV stations may choose whether to provide notice as required by this section either by a letter notification or electronically via email if the relevant MVPD agrees to receive such notices by email. Letter notifications to MVPDs must be sent by certified mail, return receipt requested to the MVPD's address in the FCC's Online Public Inspection File (OPIF), if the MVPD has an online file. For cable systems that do not have an online file, notices must be sent to the cable system's official address of record provided in the system's most recent filing in the FCC's Cable Operations and Licensing System (COALS). For MVPDs with no official address in OPIF or COALS, the letter must be sent to the MVPD's official corporate address registered with their State of incorporation.

-----++++-----

This rule indicates this notification must be made 120 days in advance of any changes before the repack or 90 days after the repack is complete.

The MVPD industry has many technical considerations when stations markets make logical changes in the location of market broadcast services that may be difficult for MVPDs to accomplish quickly.

Most MVPDs receive an individual broadcaster’s signals by more than one means. Typically, the primary feed may be via fiber or microwave or alternatively the primary feed may be over-the-air and the backup will be the fiber. Also, there are many cases where one cable company or headend feeds another in a cooperative effort to obtain the best and most reliable signal source.

When cable receives their signal from the broadcaster via fiber for example, generally this will be in the form a MPEG 2 Transport carrying multiple sub-streams (the primary HD along with multicast sub-streams). The primary and sub-streams essentially reflect the station services prior to service moves to other host stations to clear the spectrum required to enable an ATSC-3 Lighthouse.

After the spectrum is cleared to make way for the ATSC-3 services, this transport stream will still reflect the logical services provided by all the market broadcaster's signals, but not necessarily the physical locations of those services over-the-air. In short there will be a disconnect between what is provided via one delivery means versus the possible alternative delivery to the MVPD. It can be seen more clearly in the graphic below. After the spectrum for the Lighthouse channel has been cleared (in this case the NBC station WZZZ), the feeds coming via fiber may not reflect the over the air versions of the same streams. The logical (PSIP designated) labeling of each stream will remain the same, but the versions provided via fiber (or microwave) and over-the-air to the MVPD headend may differ.

1.0 Broadcaster Fiber Transport to Cable Headends (primary or backup)			
Call Sign:	**WXXX**	**WYYY**	**WZZZ**
HD 1:	IND 1080i	ABC 720p	NBC 1080i
HD 2:			
SD 1:	Esc 480i	Bnc 480i	Ths 480i
SD 2:	Open Slot	Laf 480i	Ant 480i
SD 3:	Open Slot	Open Slot	Open Slot
SD 4:	Open Slot	Open Slot	Open Slot
SD 5:	Open Slot	Open Slot	Open Slot
SD 6:	Open Slot	Open Slot	Open Slot

1.0 Over-the-Air Broadcasts (primary or backup)		
Call Sign:	**WXXX**	**WYYY**
HD 1:	IND 1080i	ABC 720p
HD 2:	WZZZ - NBC 1080i	
SD 1:	Esc 480i	Bnc 480i
SD 2:	Open Slot	Laf 480i
SD 3:	Open Slot	Ths 480i
SD 4:	Open Slot	Ant 480i
SD 5:	Open Slot	Open Slot
SD 6:	Open Slot	Open Slot

Regardless of which means the MVPDs use as primary and backup, their over-the-air receivers will now need to be mapped to these services in the physical transport streams of the services within the channel makeup which is quite different than their fiber feeds. This difference would seem minor, but the technology used by many MVPDs makes this particularly difficult to solve, particularly quickly.

This problem is made even more confusing by the fact that many physical MVPD head-ends feed other cable systems or sub-head-ends, that have completely different channel mappings and multiplexes.

GETTING STARTED

Master Checklist

AGREEMENTS, BUSINESS AND LICENSING

- ✓ Formal market partnership is created
- ✓ Governance agreement of the market partnership
- ✓ All broadcast partners enter into joint working agreement(s) including the sharing of displaced ATSC-1 services as well as joint use of the host station for NextGen TV - ATSC-3
- ✓ Local coordinator hired or identified
- ✓ Hosting agreements to transmit cleared lighthouse host's ATSC-1 primary and multicast signals
- ✓ Channel Sharing agreements as required by the license modification rules
- ✓ Possible separate agreement for financial arrangements between some of the parties (as in entities not providing facilities but wanting to be part of partnership for transmission)
- ✓ Capital purchase arrangements and stated (wholly owned or shared) ownership of capital equipment (several different models)
    - Shared ownership
    - Lease/rent
    - Leaseback
- ✓ Operating expense arrangements amongst parties (as in paying electricity/use of facilities/taxes/rent/depreciation)
- ✓ Primary Network approvals for legacy (hosting) station moves and NextGen IV simulcast
- ✓ Multicast Network approvals for legacy (hosting) station moves and NextGen TV simulcast
- ✓ Syndicator approvals for legacy (hosting) station moves.
- ✓ Possible MVPD retransmission agreement(s) notification obligations
- ✓ Regulatory-based MVPD legal notification (suggest early as possible reach out, but not later than 120 days in pre-repack and 90 days post repack)
- ✓ Notification(s) to Nielsen of all the impending changes in transmission frequencies and locations of legacy and new transmission services
- ✓ Agreement for FCC Program Reporting as required
- ✓ Logging Responsibility
- ✓ Pass-through of EAS testing
- ✓ Legal IDs passed through

GETTING STARTED

TECHNICAL CONSIDERATIONS

- ✓ NextGen TV license modifications must be approved and MVPD notification period must be complete before partners turn on the facilities
- ✓ Create publicity for partners now transmitting on NextGen TV facilities to create market interest in NextGen TV and educate market on required rescan
- ✓ Determine method to deliver legacy ATSC-1 services to hosting stations to clear channel
- ✓ Order any equipment or facilities to move legacy signals to hosts
- ✓ Arrange for OTA monitoring for all partner stations of hosted signals (NextGen TV and legacy)
- ✓ Obtain appropriate licenses and or upgrades for ATSC-1 PSIP Guide builders (may require replacing guide building hardware/software in ATSC-1 hosting stations)
- ✓ Determine performance of current ATSC-1 encoders and possibly new ATSC-1 MPEG-2 encoder(s) installations at stations hosting displaced ATSC-1 services to obtain efficiencies required
- ✓ Meet with MVPDs and deliver formal market notification as required by the FCC rules to provide the longest lead time for their requirements (minimum 120 days prior to clearing in pre-repack market, 90 days for post repack markets)
- ✓ Design ATSC-3 NextGen TV facilities
- ✓ Determine primary ATSC-3 equipment vendors and sign contracts for new equipment taking into account:
    - Decoding and or interface equipment to import legacy services to feed up/down/cross and encoding equipment
    - Fiber, Microwave, OTA demods
    - MPEG2 TS, SDI or IP interfaces
    - Up/Down Cross Conversion possibly required
    - An ATSC-3 watermark embedder should be included for each service for the broadcaster's use of the audio watermark as described in ATSC A/344:2016
    - Encoders (one per service, usually packaged multiple encoders per hardware unit) with VBR and statmux capability (not all can do VBR or stamux)
    - CENC encoder (for DRM)
    - Packager (usually integral to encoding but not always)
    - Route Encapsulator/AL-FEC/HTML Proxy/Guide
    - Scheduler/Broadcast Gateway

- Possible router for STL if shared facility with ATSC-1 services
- IP Patching
- At least three or possibly four enterprise-grade managed 24-48 port switches
- Hardware VPN portal
- Broadband connectivity
- STL capable of > 50Mb/sec or so in IP
- Monitoring (as in a Triveni StreamScope or Streamscope Verifier)
- Good laptop (for PCAP record and play)
- Enterprise grade KVM
- OTA receiver (as in Aster or DVEO)
- At least one empty rack/dual power
- UPS

✓ Design and build connectivity from NextGen TV host station to ATSC-1 hosting stations (if required)

- Fiber
- Microwave
- Broadband with deep FEC (as in Zixi)
- Build connectivity if required from partner stations to NextGen TV facilities
- Fiber
- Microwave
- Over-the-Air

Purchasing ATSC-1 Equipment

In standing up a Lighthouse station a broadcaster will be clearing spectrum by moving ATSC-1 services to other partner channels. The capabilities of the partner station's facilities are critical to making these moves possible.

Equipment that is likely required at partner stations that will be needed to clear ATSC-1 spectrum:

- Fiber modems or microwave to transport IP or ATSC-1 Transport Streams to the Lighthouse station
- Fiber modems or microwave to transport IP or ATSC-1 Transport Streams to stations hosting the Lighthouse station primary or multicast streams.
- Additional ATSC-1 PSIP guide building channels for each service moved (and subscription services)
- An ATSC-3 watermark embedder should be included for each service for the Broadcaster's use of the audio watermark as described in ATSC A/344:2016.
- Possibly separate Nielsen encoding equipment depending on where in the transport chain the services are extracted from.
- More efficient ATSC-1 MPEG-2 encoders. If relatively new, higher efficiency MPEG-2 encoders have been already deployed, additional service licenses may be required.
- Monitoring equipment to ensure the services are on the air at each location

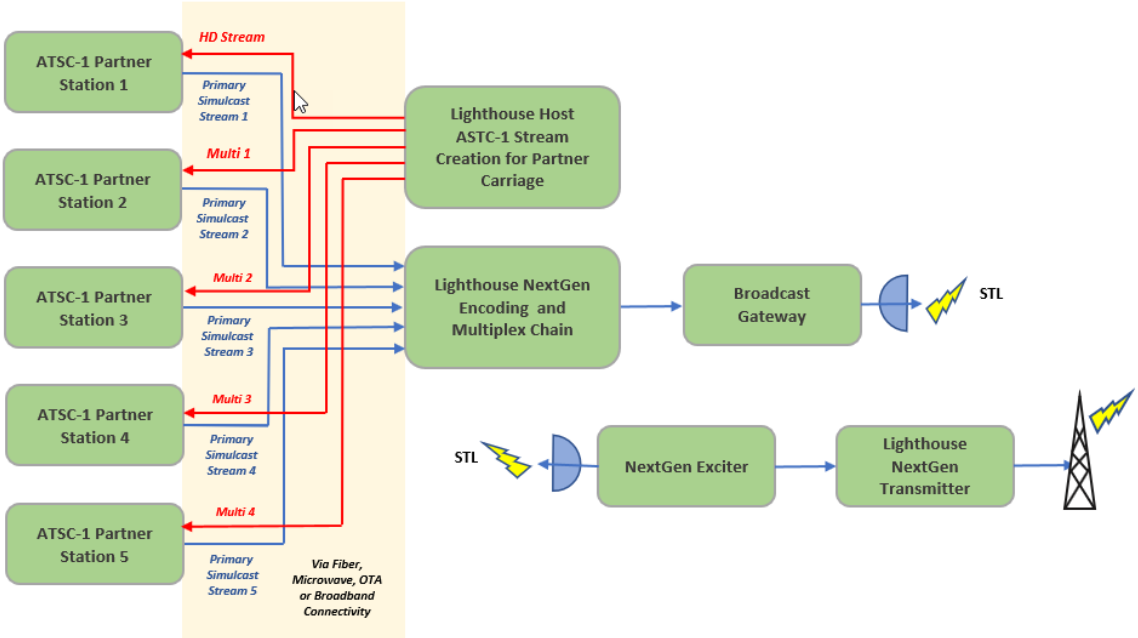

Purchasing ATSC-3 Equipment

ATSC-3 equipment functionality is often physically packaged in different ways, so only the technical requirements are indicated below keeping in mind that multiple functions can appear in a single physical package.

When purchasing equipment for a Lighthouse ATSC-3 NextGen TV system the functionally will appear as below at its simplest form. However, many of these are a logical function and will likely reside in a single physical device as with the multiple UP/Down/Cross video converters, video encoders, statistical multiplexer, audio encoders as well as MPD manifest packager. Alternatively, other manufacturers have placed all the functions from audio and video input to Broadcast Gateway/Scheduler output in a single virtual server device.

These are software-only-based systems and generally run on PC-based devices. Software-based devices provide easy upgrade and configuration with a web-based GUI. Also, because this is computer/software-based equipment care is taken in power conditioning and service backup.

Please note the IP Addressing section in the Operations section below. It is strongly recommended that while building a NextGen TV facility the design of the network topology use high quality managed switches, patching and routing. Much of the data is UDP as well as multicast with VLANs that require conservative network topological techniques. Also, broadband control connectivity should always use VPN connectivity, remote desktop services with the use of dual NIC cards.

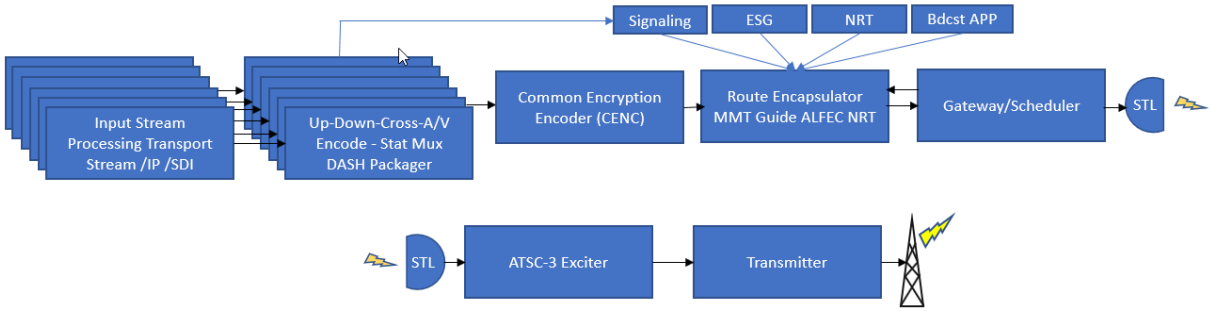

GETTING STARTED

VIDEO REQUIREMENTS

Feature	Description
Constant or Variable Frame Rate Encoding	User selectable
HEVC	Resolutions and frame rates may be cross converted in the encoder.
Progressive Formats: 540p, 720p, 1080p, 2160p	4K Encoders are often packaged one per hardware unit, others are often multiple encoders per package
Interlaced Formats: 1080i, 480i	Support of legacy, if required
Frame Rates: 120, 60, 59.94, 29.97, 30	Fractional (for Legacy) and Integer
SHVC Configurations:	
SHVC Case 1	BL: 540p (OTA), EL: 1080p (OTA, OTT)
SHVC Case 2	BL: 720p (OTA), EL:1080p (OTA, OTT)
SHVC Case 3	BL: 1080p (OTA), EL:2160p (OTA, OTT) 4K (2160P) may be optional
Other:	
HDR-10 (PQ), WCG	BT.2020; BT.709 for SDR
HFR (120fps) with Temporal Sub-layering	Temporal Sub-layering not supported in SHVC. Temporal sub-layering is only used for progressive video.
OTT delivery of Enhancement Layer	OTT delivery of EL is desirable due to the limited bandwidth available during the transition. Will require an origin server

AUDIO REQUIREMENTS

Feature	Description
AC-4 Encoder	Often packaged with video encoding chain
Based in V2 Dolby SDK	Contains latest capabilities including 7.2+4 and Dialog Enhancement
Mono, 5.1, 7.2+4	Metadata to drive packager is currently problematic
Multiple languages (i.e. "SAP") and alternative track (i.e. commentary) offerings	See below
Multiple Complete Main	Metadata or UI to support provision of multiple complete main bitstreams
M&E + English & Spanish	
M&E + English & VDS	
Multiple M&E + Dialog presentations	(Reference A/342 Table A.1.1)
Complete M&E + English + Spanish + VDS	Settings or UI to select from multiple presentations
Complete M&E + English +English Home/Away Commentary + Spanish	Max number of individual elements: 13
Complete M&E + 3-5 arbitrary dialog tracks, VDS or objects	Max number of individual elements: 13
High Order Ambisonics (HOA), M&E + Dialog/VDS + Objects	
Object/Spatial Object Groups + Low Frequency Effects, M&E + Dialog	
Hybrid delivery	Near Term: Broadband audio stream will include all sub-streams. Long Term, when latency improvements are available: Mixing of OTA, OTT on the receiver. Will require an origin server
Dialog Enhancement	Settings or UI to enable, disable & adjust level of enhancement
Intelligent Loudness	Settings to enable, disable
Watermark Embedding	ATSC audio watermark

GETTING STARTED

PACKAGER REQUIREMENTS

Feature	Description
DASH	Media Segment Control from 50 ms to 5 seconds
Multiperiod MPDs	DRM may drive different lengths
Metadata	Manual selection or metadata driven manifest content control

CLOSED CAPTIONING REQUIREMENTS

Feature	Description
IMSC1 Captions	Text & Image Profiles. Two modes apply. CTA 708 "Tunneled Mode" per below or by direct conversion to native IMSC1.
Conversion and Carriage of Legacy Caption Data	Translation of CTA 708 per SMPTE RP2052-11 (with additional provisions re: A/343)

SECURITY REQUIREMENTS

Feature	Description
Content Encryption (CENC)	CBC and CTR modes. (Note: DASH IF IOPs currently only require CTR mode)
Trusted Execution Environment (TEE)	Secure media pipeline
DRM	Broadcaster App may or may not be required to enable DRM.
Clearkey	Simplest level of encryption; for broadcasters who don't have a need for DRM level protections. Keys are pre-shared or delivered via Broadcaster App.
Widevine	Pre-loaded licenses & OTT provisioning (individualization) & request/delivery of licenses.
CDM v14	Update of Device Group Licenses via OTA NRT must also be supported.
Device Provisioning:	
Pre-installed Device Group Licenses	Support of preprovisioned licenses in receivers
PlayReady v4.0	OTT provisioning (individualization) & request/delivery of licenses only.
	Device Porting Kit v4.0.5102
Signaling (A/331)	In addition to signaling the DRM Data Service in the SLT.Service@serviceCategory, population of @drmSystemID in the SLT will allow the media player to initialize the correct Content Decryption Module prior to receiving an MPD
Application Code Signing (with broadcast certs)	Apps signed twice – once by the author, a second time by the broadcaster
Signaling Message Signing (with broadcast certs)	Certification Data Table is signed with a different certificate than other signaling tables

Security Requirements Continued

Client Authentication – Device Model Certificates	X.509 Certificates issued by the same PKI that issues App and Signaling signing certificates. May require conformance/certification. Used by the broadcaster to authenticate client device models.

TRANSPORT REQUIREMENTS

Feature	Description
DASH	Per DASH-IF ATSC-3 Profile
CMAF Container	Per DASH-IF ATSC-3 Profile
Multi-period MPDs	Periods could have different DRM schemes
Segment Timelines or Segment Numbering	User Choice
MDE Mode (or equivalent)	CMAF Fragments with low latency chunks may be preferred
MPD xlinks	Broadcaster application usage, including content replacement
AL-FEC, with Repair Flow for NRT	OTA delivery of NRT - to include Application and other files (audio, video, images, etc.)
Layered Divisional Multiplexing (LDM)	
Regional Service Availability Table (RSAT)	
MMT	Alternative to ROUTE/DASH
DWD	Distribution Window Description, for scheduled NRT delivery (may not be required)
Channel Bonding	Excluded (May be desirable in 3-5 years, but probably not in short term)

ADVANCED EMERGENCY ALERT (AEA) REQUIREMENTS

Feature	Description
Advanced Emergency Alerts	CTA-CEB32.6 (still in draft)

NON-REAL TIME (NRT) FILE DELIVERY REQUIREMENTS

Feature	Description
Service Announcement (program guide)	PLP assignment and Carousel Rate
DRM Licenses	PLP assignment and Carousel Rate
Broadcaster App + Resources	PLP assignment and Carousel Rate
Enhanced or alternate audio/video	PLP assignment and Carousel Rate

GUIDE REQUIREMENTS

Feature	Description
Carouseled Guide Services Support	Guide database that allows for local entry and modification

INTERACTIVE RUNTIME DELIVERY REQUIREMENTS

Feature	Description
Runtime environment A/344	Carouseled (OTA), broadband (OTT) and hybrid delivery (combined OTA & OTT)

STREAM ASSIGNMENT REQUIREMENTS

Feature	Description
Carouseled (OTA), broadband (OTT) and hybrid delivery (combined OTA & OTT)	
Support of logically 64 PLPs with a minimum of 4 configurable	Minimum of 4 configurable and assignable
Support of Services spread over multiple PLPs	

TRANSMSSION REQUIREMENTS

Feature	Description
Modulation and Coding	Per CTA-CEB32.2 as constrained below
FEC length	16200, 64800
FEC code	BCH, CRC+LDPC
Code Rate	2/15, 3/15, 4/15, 5/15, 6/15, 7/15, 8/15, 9/15, 10/15, 11/15, 12/15, 13/15
Constellation	QPSK, NUC, 16QAM, 64QAM, 256QAM, 1024QAM, 4096QAM (unlikely to be used in short term)
Transmission mode	SISO (more complex versions of MISO, MIMO and Channel Bonding require additional equipment)
Interleaving	Convolutional Time Interleaver, Hybrid Time Interleaver
FFT size	8K, 16K, 32K
Versatile PLP mapping	TDM, FDM, TFDM, LDM
LDM	Multiple injection levels
Multiple Simultaneous PLPs (up to 4) for a single or separate service	For example: Audio(s), Video(s), Signaling in different PLPs all belonging to the same service
Support for SFNs	Multiple broadcasts at varying delays
Support for Backup Gateway/Exciter	

OPERATIONS SECTION

Operations Section

This section describes what is required for the actual operation of the NextGen TV and ATSC-1 hosting facilities.

OPERATIONS SECTION

Initial Setup Parameters

INITIAL YEAR 2020 ROLLOUT - PHOENIX RECOMMENDED SETUP

There are a very large number of possible parameters that can be selected throughout any ATSC-3, NextGen TV system setup. The broadcaster can control parameters for the video and audio quality as well as numbers of Physical Layer Pipes (PLPs). Additionally, the broadcaster can select crucial RF transmission parameters for each of the different PLPs. There are additional options requiring decisions that need to be considered and must be selected individually. It is a daunting task at best.

Below is provided an initial "typical" setup that provides slightly less than theoretical coverage of a similarly powered legacy ATSC-1 transmission. It may provide a good compromise selection in the coverage and bandwidth needs.

That is not to say that the broadcaster cannot make alternative selections. It is generally easier for the purposes of getting on the air initially to have some guideline for critical parameters to start. There are iPhone/iPad and Android applications as well as spreadsheets available to help in calculating the available ATSC-3 parameters and their impact on C/N, market coverage, and available bandwidth.

In the setup described below, it is assumed there are about 5 individual service of HD HEVC encoded, variable bit rate video either in 1080i or 720P and that you may opt to convert to 1080P, 60hz. It is also assumed that the broadcaster would opt for statistical multiplexing to optimize bandwidth use. Also, it is assumed you will also select an AC/4 data rate for the 5.1 Complete Main audio at least 96 to 144 kb/sec. As with all parameters mentioned so far, you have options, this is just a place to start.

INITIAL SETUP PARAMETERS

- Video target bandwidth – 4 Mb/sec
- Multiplex – Statistical
- Priority – Equal
- Audio Bandwidth – 96 k/sec
- DASH Segment length – 2 seconds
- Services should be identified as their home logical channel number
- BSID is the same as the NTSC/ATSC-1 TSID
- Number of PLPs – One as PLP-0 (if other PLPs are utilized, you should always start with PLP0 which should be the most robust parameters)
- FFT Size – 32K

- Bandwidth Use – 96%
- Guard Interval –1536
- Scattered Pilot Pattern – 8_2
- Constellation Size – 256 QAM
- LDPC Frame Length – 64800
- Code Tate – 9/15
- Outer Code – BCH
- Approximate Yielded Bandwidth – 23 Mb/sec
- Approximate C/N –17 dB Gaussian

As noted, there are literally thousands of combinations of setup parameters that trade Carrier to Noise (coverage) with bandwidth. Since there is not a minimum coverage requirement in the current FCC rules for NextGen TV transmission, the broadcaster is left to experiment as to what combination of parameters will meet their needs.

It should be noted that the addition of a Single Frequency Network has the potential to raise signals levels throughout the coverage area (improving C/N) and thus allow the broadcaster to be more aggressive in selecting Modulation and Coding parameters with a resultant of increase in available bandwidth.

More Advanced Parameters

SETUPS FOR SUBSEQUENT YEAR 2021 AND BEYOND

As there are many possible modulation and coding (modcod) parameters that can be selected by the broadcaster in any Next Gen TV system setup, it is valuable to consider more flexible options once experience is gained. The broadcaster should consider all options available to improve robustness to their signal (with increased coverage and receivability) versus improvements in bandwidth with an impact in receivability. Additionally, with the use of Physical Layer Pipes (PLP), configured differently, each service can be modulated with alternative modcod parameters thus providing a custom tailored receivability and bandwidth to each service multiplexed inside the single transmitted signal.

ADVANCED SETUPS

Parameter	High Capacity	ATSC 1 - Like	Robust	Middle	
	PLP-0	PLP-0	PLP-0	PLP-0	PLP-1
Type	S-PLP, SISO	S-PLP, SISO	S-PLP, SISO	SISO, w/ subframes	SISO, w/ subframes
FFT Size	32K	16K	8K	subframe 0: 8K	subframe 1: 16K
Pilot Pattern	24_2	12_4	6_2	subframe 0: 6_4	subframe 1: 12_4
Pilot Boost	1	1	4	4	
Guard Interval	G5_1024	G5_1024	G5_1024	G5_1024	
Preamble Mode	(Basic: 3, Detail: 3) Pattern Dx = 12	(Basic: 3, Detail: 3) Pattern Dx = 6	(Basic: 1, Detail: 1) Pattern Dx = 3	(Basic: 3, Detail: 3) Pattern Dx = 3	
Frame Length	246 msec	201 msec	201 msec	155 msec	
Time Interleaver	Convolutional (1024 cells)	Convolutional (1024 cells)	Convolutional (1024 cells)	Hybrid Sub0: 16 FEC blocks,	Hybrid Sub1: 64 FEC blocks)
Modulation	256 QAM	256 QAM	QPSK	subframe 0: 16 QAM	subframe 1: 256 QAM
Code Rate	9/15	8/15	5/15	subframe 0: 7/15	subframe 1: 10/15
Code Length	64K	64K	16K	64K	
Net Bit Rate [Mbps]	24.9 Mb/sec	21.4 Mb/sec	3.0 Mb/sec	Subframe 0: 3.1 Mb/sec	subframe 1: 17.7 Mb/sec
Required C/N [dB]	17.26 (est. AWGN)	15.5 (est. AWGN)	.2 (est. AWGN)	5.9 (est. AWGN)	17.9 (est. AWGN)

The Table above provides the optional parameters as well as the resultant bandwidth capacities (net of Forward Error Correction) with their estimated Carrier to Noise (C/N) which indicates the signal's robustness and coverage. There are virtually thousands of combinations of configurations supported in the standard, many of which provide similar results. These illustrated configurations are just meant to provide a guide.

The four setups described are:

- **High (bandwidth) Capacity-** This configuration provides a generous amount of channel bandwidth of 24.9 Mb/sec but at a cost of loss of C/N of just under 2 dB or so from the FCC ATSC-1 model receiver reference of 15.5 dB C/N. This configuration may provide a good compromise and is similar to the Initial Year Rollout Setup recommendation but provides a small amount of additional bandwidth.
- **ATSC-Like –** This configuration provides a generous net channel bandwidth of 21.4 Mb/sec while maintaining the conventional ATSC-1 15.5 dB C/N with resultant similar market coverage.
- **Robust –** This configuration uses ATSC-3's base QPSK modulation scheme with a vast improvement in coverage and signal receivability at .2 dB C/N. However, it comes at a heavy cost in available channel bandwidth at only 3 Mb/sec. This setting provides the greatest receivability with penetrating indoor reception as well as to mobile devices.
- **Middle –** This configuration uses 2 PLPs, one at 8K FTT and the other at 16K FFT. These PLPs are also configured at 16QAM and 256 QAM, respectively. The two PLPs have vastly different net bandwidths and receivability's with PLP-0 at 3.1 Mb/sec @5.9 dB C/N and PLP-1 at 17.7 Mb/sec @ 17.9 C/N. This provides a middle ground setting in which a broadcaster might carry several HD signals with good coverage while simultaneously in the same broadcast that allows for a service aimed a mobile audience in automobiles as well as handheld devices. It also should be noted that for efficiency and receivability, the most robust signal should occupy the lowest logical numbered PLP.

Although the use of sixty-four PLPs are allowed in ATSC-3, the reader is reminded that receivers need only support four at a time.

Also, as mentioned in the Initial Setup Parameters section, the addition of a Single Frequency Network has the potential to raise signals levels throughout the coverage area (improving C/N) allowing the broadcaster to be more aggressive in selecting modulation and coding parameters with a resultant of increase in available bandwidth.

Training

There are several opportunities for obtaining knowledge and training associated with the ATSC 3 standard.

The ATSC-3 standard is not a single document, but a suite (over 20 documents) of related Standards, Technical Reports and Recommended Practices. The ATSC-3 documents themselves are available as a free download from the ATSC website at https://www.atsc.org/standards/atsc-3-0-standards/ . Each document begins with an "A", followed by a "3" for ATSC-3 and then the number of the Specialist Group that created the document, followed by the number of the document itself. Since this is an extensible standard, this numbering is followed by a year. This tells the reader how current the standard is. Below is the cover page of A/322:2018, "Physical Layer Protocol"

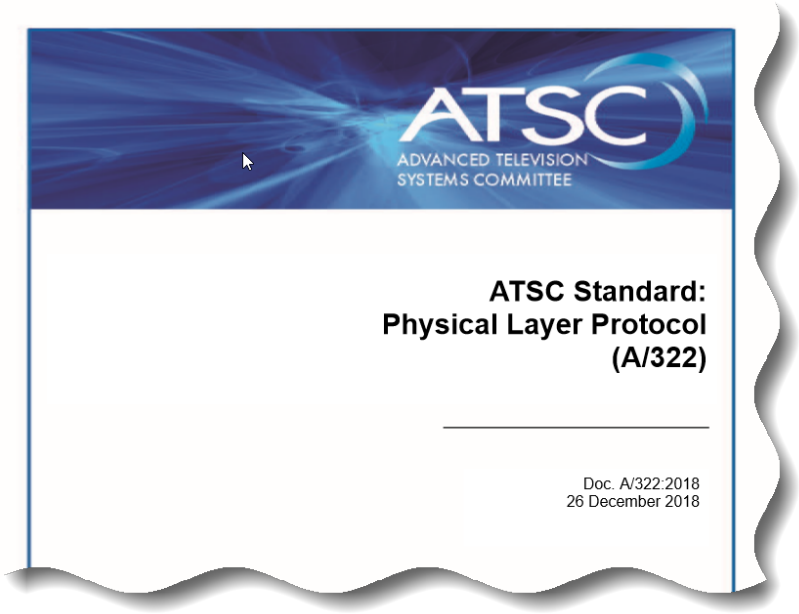

The Society of Broadcast Engineers (with ATSC's help) is providing low cost webinars on the standards elements that can be found at https://www.sbe.org/sections/edu_seminars.php. They also will provide ATSC 3.0 Specialist Certification program as well for SBE members. To hold SBE Specialist Certification, an individual must first hold one of the SBE core-four certifications: CBT, CBRE/CBTE, CSRE/CSTE or CPBE. Once the new Specialist Certification is released, applicants will take a 50-question, multiple-choice exam and answer an essay question.

If you are an IEEE member, the IEEE Broadcast Technology Society has a symposium in the fall every year as with seminars. Information is available at https://bts.ieee.org/

Every year in April at the National Association of Broadcasters Convention there are a series of technical seminars as part of their Broadcast Engineering and Information Technology Conference series called the ATSC 3 Academy whose subject matter covers the theoretical and practical deployments of ATSC-3 NextGenTV.

The Broadcast Engineering Consulting firm of Meintel, Sgrignoli, & Wallace also is providing customized local seminars on theoretical ATSC-3. More information can be found at https://mswdtv.com/

OPERATIONS SECTION

Procedures

MONITORING OF ALL SERVICES

The transmission of all shared services should be monitored by the host and the guest broadcaster for each service. Official FCC logging shall be done by the broadcaster of the service.

LOGGING OF SERVICES

Official FCC logging shall be done by the originator of the service and not necessarily the host broadcaster transmitting the service.

LEGAL ID AND EAS TESTSING

Legal IDs and EAS testing are the responsibility of the individual broadcaster providing the service.

RESUMPTION OR LOSS OF SERVICE

Assuming proper communications and trouble determination, both the host and guest service providers will work together to resume a lost service. There is special mention of the Calling Tree Section of this manual which will provide the best course of resuming a service regardless of the reason for the loss.

OPERATIONS SECTION

Calling Trees and Communications

Proper communications between the market partner hosting entities are critical for the success of hosting required in clear spectrum and transmission of the ATSC-3 NextGen TV services.

All the host and guest service broadcasters should feel the responsibility to help restore any lost service regardless of cause. The NextGen TV services will only be a success if the viewers perceive them to be reliable.

To that end a notebook, pamphlet or website should be created, maintained and distributed to all the station management teams that will either be hosting or are guest on the NextGen TV Lighthouse.

This book should contain:

- The Master Control number(s) of all the stations of the market partnership
- The Chief Engineer number(s) with an alternate for all stations
- The General Manager's number(s) for all stations
- The Network Operations Center (NOC) and after-hours number(s) for all networks, prime and multicast for all services
- The alternate carriage satellite coordinates (satellite, azimuth, transponder, etc.) for the multicast network services to use in case of fiber failure
- The number(s) for all services providing connectivity between the stations for the host/guest services (as in fiber)
- Customer service numbers for all prime vendors of equipment critical for any on-the-air service

OPERATIONS SECTION

Outside Support

Likely in a Lighthouse, content delivery, transport and transmission systems may be controlled and operated by many separate business units.

Coordination between these partner companies is critical since it is possible that actions of one partner may have consequences with another partner's transmission.

Coordination is key to ensure that critical information about passwords, setup information, transport, patching, and schematic diagrams are readily available to those that require this information.

A calling tree as called out in this manual is vital to ensure that everyone that could be possibly impacted by an action is properly notified.

OPERATIONS SECTION

IP Addressing

Apart from control to the individual pieces of equipment or inputs from outside media sources, the IP streams within a NextGen TV transport and transmission system is UDP Unicast and/or Multicast as noted below. Also, extensive use of VLANs is required because of the nature of UDP at higher data-rates that can cause contention and loss of critical packets.

It should also be noted that the LLS signal and signals associated with the Gateway have Multicast addressing. Multicast might require special handling in many switches, routers and firewalls.

Addressing may vary depending on broadcasting manufacturer, but some addressing (as in the Low Level Signaling) are set by the ATSC standard.

The equipment requiring input from local sources is likely to use a private addressing scheme such as VLAN 192.168.0.xxx through 192.168.10.xxx

A Management Network for monitoring and external equipment control network (as in web interface control) should be on a VLAN with a private address range of 10.75.113.xxx as an example. This network can also carry the required PTP or NTP time as required by generally all the equipment used in NextGen TV transmission equipment. This VLAN may need to be extended up through the STL to the exciter as well as receiving the common clock. It should be noted that some implementations of NTP default to Multicast operation. PTP is generally Unicast.

The address and port used to retrieve the PTP or NTP time is usually dependent manufacturer preference. The time source often derived from GPS sources.

A separate VLAN should be used for the output of the Encapsulator/Guide Building Block whose output feed to the Scheduler using addresses in the 10.75.13.xxx range. This will keep this high speed UDP stream from contending with other device data sources such as the STLTP output.

The Studio to Transmitter Link Transport Protocol output of the Scheduler/Broadcast Gateway should use a separate VLAN 239.0.0.XX which is a Multicast address range. This VLAN also should carry the Low Level Signaling (LLS), using 224.0.23.60/ Port 4937. These are defined in the ATSC standard.

If equipment needs a Broadband/Internet or external control/monitoring connection, they can be connected on VLAN 10.20.192.xxx. It is strongly suggested that a VPN with dual NIC cards (via local desktop program) is used to provide isolation and security on this connection.

PTP or NTP Clock

Nearly all equipment throughout the ATSC-3 encoding, packaging, ROUTE encapsulation, signaling, scheduling and exciter transmission will require a source of RFC 5905 Network Time Protocol (NTP) or IEEE 1588 Precise Time Protocol (PTP). It is best practice to have the source of the time come from a single source within the broadcast facility. Likely, it will be derived from a GPS receiver that can convert to PTP or NTP timing. It is advised that you use only a single receiver/server source and distribute the time in either format required. The small latencies found in mixed sources have found to be a problem in practice.

Watermarking

ATSC has established both audio and video watermarking standards that enable television receivers to activate selective NextGen TV features as in Interactive Content received via legacy, non-compatible ATSC 3 interfaces, such as found in redistribution scenarios of cable or satellite.

The watermarks carry signaling information that broadband connected receivers can use to recover program-synchronized ATSC 3.0 applications, further signaling or content, typically from broadband servers operated by the broadcaster or a managed service provider. The ATSC audio and video watermarks can be used independently or together.

ATSC watermark embedders must be configured to embed a unique, registered Server Code value. Server Code registration must be performed by a registrar designated by ATSC found at https://www.atsc.org/336-server-code-registrar-information/

Content and Service Protection

We all should be concerned that what is being transmitted is really what the broadcaster intended and that no bad actors have interfered, hijacked or hacked this content on its way to the viewer. This is all too real in the modern media distribution world.

Also, we live in a time in which broadcasters and content producers must protect content from improper use and distribution. Sadly, it has become relatively easy to unlawfully reuse, reproduce or distribute content without regard to the original rights holder using relatively inexpensive technology.

Because of these all too real possibilities, the architects of NextGen TV ensured that robust Content Security and Protection was included in its original design.

In NextGen TV there are two main ways in which the streams are protected. First, all the imbedded signaling that the broadcaster sends to the viewer's receiver to provide the means to identify and decode the services transmitted are signed (certified as authentic). This "signature" is a very secure way in which the broadcaster identifies the services and attendant signaling tables to be true and authentic. This is done through a process called Certification which will be described below.

Next, to protect the security of the media content, it can be encrypted. This encryption uses an extremely secure cryptography with a key only known by the broadcaster's encryption equipment and the viewer's receiver decryption client. The distribution and security attendant to this key and how they are used to secure the content is also described in this section.

PUBLIC KEY INFRASTRUCTURE OR PKI

The very basic content security technology used in NextGen TV is based in the use of a Public Key Infrastructure or PKI. A PKI is a series of policies and technologies needed to manage, distribute or revoke digital Certificates. This infrastructure is generally established and managed by a Security Authority, who sets all this system's policies. These policies include defining the requirements for content protection, (user) compliance and robustness rules (usually by established industry standards), maintenance of agreements with PKI participants, as well as acting as the policy's enforcement authority. The Security Authority also establishes and enforces criteria for device certification/validation and conformance to content protection requirements. Additionally, it approves test procedures and independent testing companies while also authorizing access to pre-loaded device DRM licenses.

Specifically, the PKI used in NextGen TV uses a technique called Public key cryptography. This underlying technology makes use of a mathematically related Public Key and Private Key set. Content encrypted using the Private Key can only be decrypted using the Public Key. Conversely, data encrypted by the Public Key can only be decrypted by the Private Key. The Private Key is just that. It is used at the time of encryption and must be held secret and not shared. It does not need to be shared because an openly shared Public Key can be used to decrypt the content.

Conversely, because the public key can only be used to create encrypted files that can be decoded by the secret, Private Key, it is of little use to a bad actor. Also, the complexity of the mathematics used to define the relationship of the Keys is so complex, it is highly impractical to use one Key to determine or reverse engineer the value of the other.

OVERALL CONTENT AND SERVICE PROTECTION SYSTEM

Below is a simplified graphic that summarizes a high-level view of the NextGen TV Content Security system which contain elements of the PKI, broadcaster facility and viewer's receiver.

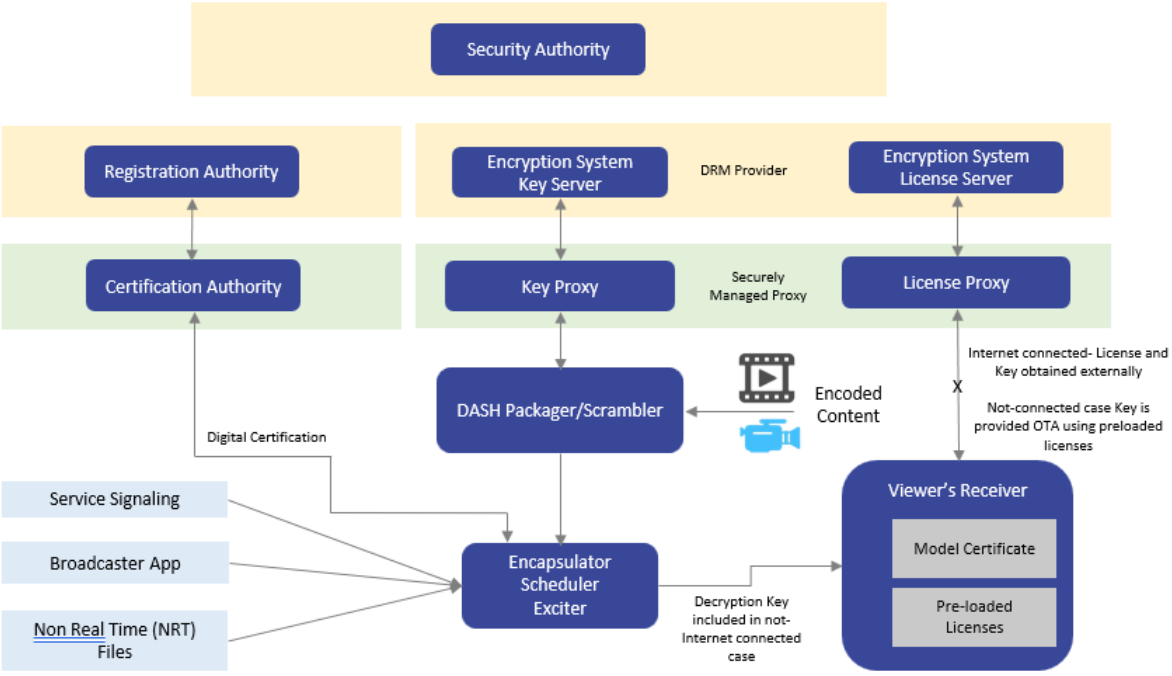

The Security Authority shown in the block above sets all the Content Protection and Security Policies as mentioned earlier.

OPERATIONS SECTION

CONTENT SECURITY OR DIGITAL RIGHTS MANAGEMENT

The Digital Rights Management (DRM) Provider shown above is responsible for two functions. One is to provide Licenses and the other is to protect the Keys used by the broadcaster's encryption equipment.

These Licenses can be delivered to the viewer's receiver via the Internet if the receiver is connected to the Internet. However, multiple Licenses are also installed in the receiver at the factory for when the receiver is not connected to the Internet. Regardless of the source of the Licenses, they contain what is required by the viewer's receiver to decrypt the encrypted content. These Licenses also specify output controls, as well as whether the Licenses are persistent or have a specified lifetime.

The Key Server's main function is to associate Licenses with Encryption Keys and to create DRM specific information for the DASH manifests. The Key Server can optionally create the Content Encryption Key (CEK) if the broadcaster's Packager requests it.

Each License has a set of attributes that dictate how the content can be handled. Example attributes include.

- Duration of the license and playback
- Persistence for offline viewing
- Track types (video, audio SD, HD, UHD)
- Renewal parameters
- Output protection (HDCP etc….. only applies to devices with output capability)
- Security Level (where and how cryptography and /or video processing is performed)

Within the broadcaster's Packager, a Common Encryption (CENC) server is used to encrypt the content. Content Encryption Keys (CEK) obtained from the Key Proxy show in the graphic above. They are used by the CENC's scrambler to encrypt the content. Each CEK has a CEK_ID. These Keys can change periodically (seconds to hours in rotation) set by the broadcaster and controlled by the policies of the content providers, the Security Authority and DRM Provider.

The DASH-IF profile calls for the delivery of Protection System Specific Header or pssh data – containing content protection information from the DRM Authority to be delivered to the receiver within the service's manifest MPD rather than within the ISOBMFF container. When using preloaded Licenses or Key rotation, CEKs are delivered to the receiver as well as the pssh data having been encrypted multiple times.

The pssh data contains License acquisition data or Keys needed by a specific content protection system (DRM) to acquire a License and decrypt the media content.

Here is the DRM Encryption process:

1. Packager/CENC Scrambler requests from the Key Server (by way of the proxy) a CEK
2. Key Server sends a CEK plus pssh data
3. Packager/CENC Scrambler encrypts the content with the CEK, puts pssh data in the DASH MPD. When pre-loaded Licenses are used, or Key rotation is enabled an encrypted version of the CEK resides in the pssh data as well.

It may be of interest how the decryption process works as well. A simplified graphic is provided below for reference. It is high level in nature and is used only to provide a general understanding of this very complex and thus very secure process.

It has been pointed out that the receiver must be able to decrypt media content whether it is connected to the Internet and can receive the Licenses and Keys in that fashion or whether it never or only occasionally will be connected to the Internet.

If it is not connected, the receiver will make use of preloaded (at the factory) Licenses containing keys that can be used to decode the content. Should these ever be compromised, the receiver can have its preloaded Licenses replaced via a firmware upgrade, through the Internet or by Over-the-Air (OTA) delivery as an NRT file.

The version of decryption control used below makes use of the WebSocket features made available in the ATSC A/344 specification via a broadcaster application. The receiver uses a logical device or software engine known as a Content Decryption Module or CDM. A CDM is a DRM system specific software engine that performs many tasks associated with decryption for the DRM system in use.

The receiver also has a similar but alternative workflow to decrypt content without the use of a broadcaster application.

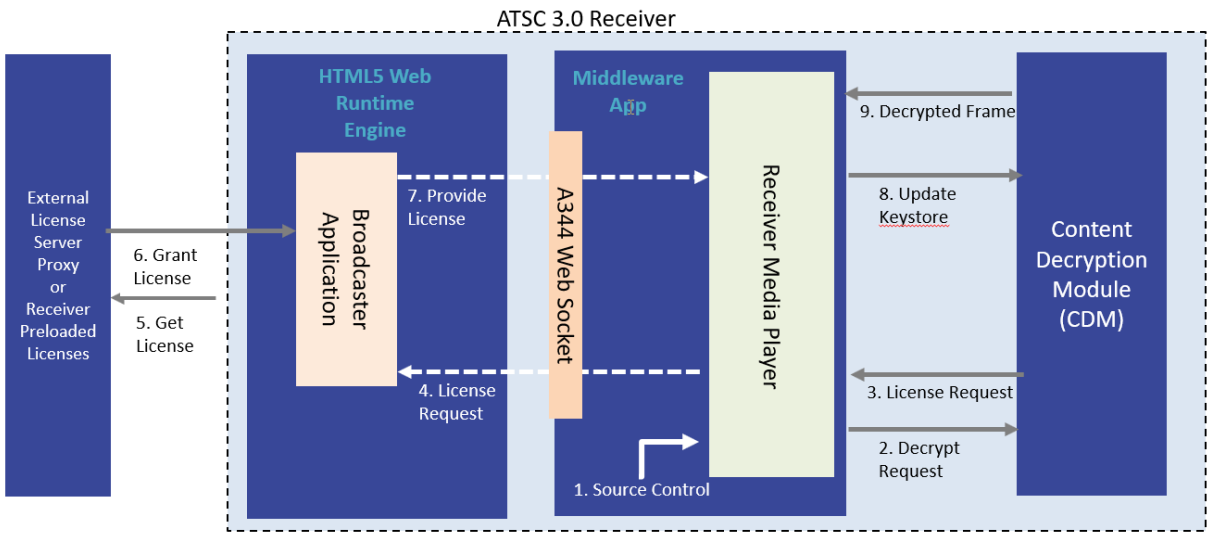

This is how this decryption takes place:

1. The viewer changes to a new channel.
2. The content's DASH Manifest MPD includes a pssh data that indicates that the content is protected and thus signals the CDM to prepare to decrypt.
3. The CDM sends a License and Key request to the media player with information from pssh data.
4. The media player passes the request on through the broadcaster application.
5. The CDM checks to see if it already has a License for the content. If not, a License request is passed on to the receiver's media player which relays it via a WebSocket connection to the broadcaster app. The broadcaster app in turn makes a request to the License server.
6. The granted License is then delivered back to the broadcaster application
7. The broadcaster application, in turn, sends the License on to the media player. The appropriate Key_ID as well as other decryption information is extracted from the License and sent to the CDM
8. Using the appropriate Key, the decrypted content is sent to the Media Player

This is an overly simple explanation of the content protection scheme. The actual processes are far more complex with many layers of encryption of the Key values as well as the process itself. However, all the most important details required to understand the overall process are included.

OPERATIONS SECTION

SERVICE PROTECTION

The Registration Authority as shown, uses the policies set by the Security Authority and manages the methodologies to be used in the procedure used by the Certificate Authority.

As shown in the graphic, the broadcaster's Packager that digitally negotiates with the Certificate Authority that responds to a valid query with a digital Certificate containing an encrypted Certification key. This is accomplished using the Online Certificate Status Protocol (OCSP) which is an Internet protocol used for obtaining the revocation status of an digital Certificate via a device call the OCSP responder operated by the Certificate Authority. The issued Certificate is used in the signing process of the broadcast's service signaling, application and NRT delivery. This protocol is the successor to the more familiar Secure Socket Layer protocol (SSL) used widely on the internet to secure web content. This process is used to test the validity of the service signaling, applications and NRT files delivered to the viewer's receiver. This procedure ensures all these files were delivered securely and were not tampered with during transmission.

OPERATIONS SECTION

Broadcaster Application and Framework

BROADCASTER APPLICATION

One of the more important improvements in NextGen TV is the refinement in the viewer experience. Although much of this improvement comes from better quality video and audio, viewers have been conditioned by their experience with Internet-delivered content to expect a more engaging consumer experience

One of the ways of making the viewing experience richer is with the addition of a viewer application that can be provided by the broadcaster to support of the content experience. This web-type application can be used for navigating, enriching the program content, deep linking into related information such as cast biographies and possibly ancillary data such as weather, traffic or school closing information to name just a small range of what might be possible.

All this information can be shared with the viewer while watching entertainment, sports or news programming. This content can all be provided using a Broadcaster Application which is sent as a Non-Real Time data file within the standard broadcast service.

A Broadcaster Application is a set of documents comprised of web-type W3C compliant, HTML5, JavaScript, CSS, XML, image and multimedia files that are delivered separately or together within one or more broadcast or Internet-delivered packages.

The Broadcaster Application can be launched after the viewer's receiver application receives signaling information from the launch URL found in the HELD (HTML Entry pages Location Description) which is a signaling table contained within the broadcast service's SLS signaling. This URL then forwards that launch URL to the receiver's User Agent (This "browser" capability is referred to as a User Agent in NextGen TV), which, in turn, loads the Broadcaster Application Entry Page from the URL. That URL may point to an Internet server or to the Receiver Web Server depending on how it is formatted in the service's application signaling.

Once the main Broadcaster Application Entry Page has been loaded, it may begin requesting content from various local or external URLs. This may be done through JavaScript or standard HTML5 requests in a W3C-compliant fashion.

The non-real-time file transmissions that contain the Broadcaster Application or Framework based in HTML, CSS, Javascript as well as alternatively ancillary digital data to be used in the application (such as media files) are provided in gzip compressed MIME Package in a ROUTE session within the broadcast service with appropriate addressing to be recognized and loaded by the receiver's User Agent. These files will likely be transmitted repeatedly in a "carousel" manner

at a repetition rate selected by the Broadcaster that is consistent with rapid application loading while minimizing impact on data transmission overhead.

It is assumed that any content received over broadcast via ROUTE file delivery is available through the receiver's Application Context Cache and the Broadcaster Application can access the resources using HTTP requests to the Receiver Web Server.

The User Agent may also perform internal caching of content. The internal W3C-compatible storage mechanisms implemented within the User Agent should not be confused with the Application Context Cache. The Broadcaster Application can use standard W3C interfaces to discover and use the various User Agent storage facilities.

In the over-the-air broadcast environment the files associated with a Broadcaster Application are delivered in ROUTE packages that are unpacked into a cache area. In the broadband-delivered environment, launching an application behaves in the same way as in a normal web environment with no specialized behavior or intervention by the receiver. The Broadcaster Application then executes inside a W3C-compliant User Agent while accessing some of the graphical elements of the receiver to render the user interface or accessing some of the resources or information provided by the receiver.

If a Broadcaster Application requires access to resources such as information known to the receiver (as in receiver status), or requires the receiver to perform a specific action that is not defined by standard W3C User Agent APIs that are widely implemented by browsers, then the Broadcaster Application sends a request to the receiver's WebSocket Server. The WebSocket Server will then provide access to the APIs to access the resources that are available in the receiver (as in receiver controls or status), or to receive notifications via broadcast signaling, or to request the performance of actions that are not otherwise available via standard APIs.

Using these internal APIs, the Broadcaster Application can request receivers to perform certain functions such as:

- Use of the Receiver's Media Player (RMP)
- Stream media content via the broadcast or broadband delivery mechanism
- Playback media content that has been downloaded via broadcast or broadband delivery mechanisms.
- Query information that is specific to the reception of TV services, for example, the status of closed caption display and language references, or receive notifications of changes in this information
- Operate receiver controls and monitor status (i.e. channel number, volume etc.)

OPERATIONS SECTION

It is important to understand that there is a difference between a Broadcaster Application in a NextGen TV broadcast environment and HTML5 application deployed in a web environment. In the NextGen TV broadcast environment, a Broadcaster Application can access resources from broadcast or broadband.

Also, there is a difference between these two models in that within the normal web environment, the viewer is in direct control of launching an HTML5 application by specifying the URL of a desired website. In the NextGen TV environment, although the user still initiates the action by selecting a service, the actual application URL is not directly selected by the viewer and instead is provided via broadcast signaling. In that case, it is the responsibility of the receiver using its User Agent to launch or terminate the Broadcaster Application referenced by a URL provided in broadcast signaling. The Broadcaster Application relies on the set of features that are provided via the User Agent. However, standard web technologies are generally used to serve the pages.

The display screen in a NextGen TV receiver is in its simplest description a W3C-compliant web browser that can display components of HTML5 code. This "browser" capability is referred to as a User Agent in NextGen TV. It will display the video and audio being transmitted by the broadcaster inside that User Agent in a logical device known as the Receiver Media Player or RMP. It also can alternatively use an alternate Application Media Player or AMP provided by the Broadcaster Application that can also be downloaded and run by the User Agent. The broadcaster can push this application and content to the receiver as a Non Real Time (NRT) file and the viewer can use links within this code to pull content provided from within that downloaded code or alternatively from the Internet in the case of broadband, Internet-connected receivers.

Below is a graphical representation of Receiver's User Agent. This example is shown with a Broadcaster Application requesting content and using the libraries, code and APIs from the Common Application Framework. The Broadcaster Application can be the standardized version developed by the Phoenix Partners, a customized version with functionality added by the broadcaster, or a broadcaster application completely developed by the broadcaster that does not use the Framework at all. In the last case the Framework block would not appear in this graphic.

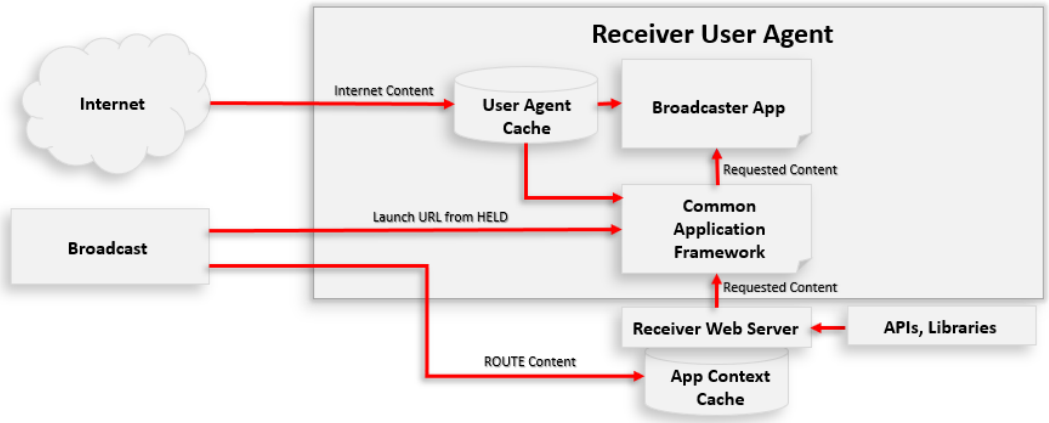

Receiver Unser Agent Functionality

The Receiver Media Player (RMP) presents its video output behind any visible output from the Broadcaster Application. The graphic below illustrates the relationship and the composition function performed in the receiver.

In the example on the left side of the graphic from the ATSC A/344 specification is what this would look like graphically as a composite display. the graphical output from the Broadcaster Application is overlaid onto the full-screen video being rendered by the RMP. For the linear A/V service with application enhancement, the Broadcaster Application code may instruct the RMP to scale and position the video, as it may wish to use more area for graphics.

This case is illustrated in the example shown on the right side of the graphic below. The Broadcaster Application will in this case define the appearance of the screen surrounding the video window. It can do that by defining the background in such a way that the rectangular area where the RMP video is placed is specified as transparent.

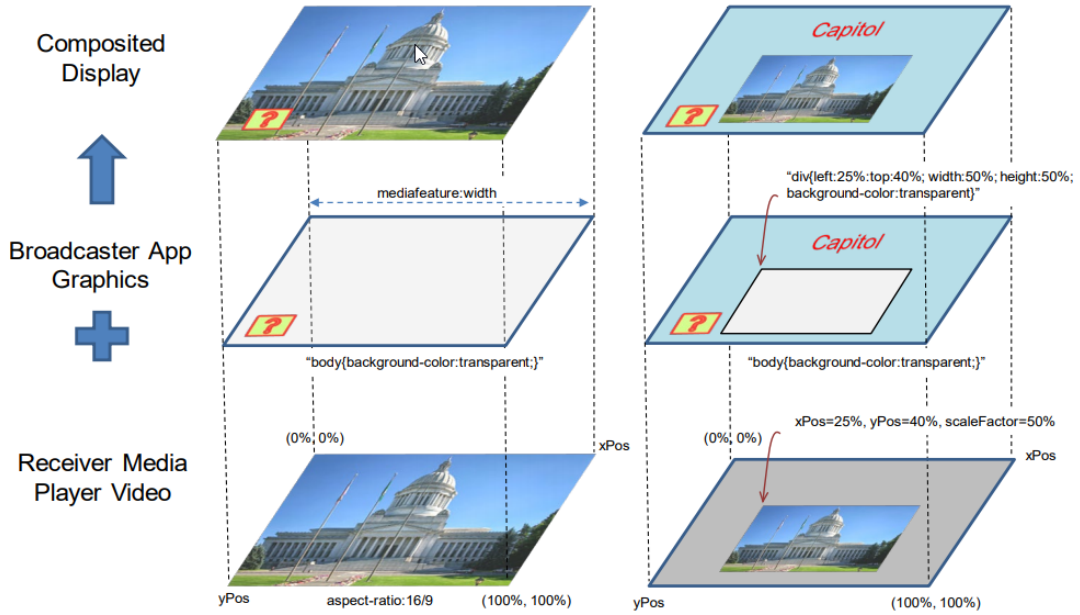

NextGen TV Composited Display with a Broadcaster Application

A Broadcaster Application can expect that the User Agent graphics window RMP logical video display window to be defaulted at its full dimensions of the viewer's screen. Also, since most receiver user interfaces may not enable scroll bar manipulation, the Broadcaster Application will likely disable this capability using standard W3C mechanisms.

It should also be noted that the display of closed captioning is directly related to the current audio selected and is expected to be presented on top of all other content and video. However, the display of closed captioning is the responsibility of the RMP.

A receiver may also choose to render its own native control application on top of the Broadcaster Application due to some user interaction. For example, this may happen when the viewer chooses to configure the receiver settings while a Broadcaster Application is active.

When the receiver presents its own native control application, the receiver, through standard W3C notification methods, shall notify the Broadcaster Application that it no longer has the focus. The Broadcaster Application may choose to either hide itself or maintain its current display. This behavior is left up to design of each Broadcaster Application.

Additionally, the receiver may choose to hide the launched Broadcaster Application to avoid issues with scaling video and a full-scale Broadcaster Application. The behavior of whether the Broadcaster Application is hidden or not is left up to the receiver's control application, but the

receiver will not terminate the Broadcaster Application, as long as the associated broadcast service remains selected and application signaling has not selected another Broadcaster Application.

Regardless of whether the Broadcaster Application is hidden or behind a receiver's native control application, the Broadcaster Application is notified that it has lost its focus via standard W3C notification methods.

COMMON APPLICATION FRAMEWORK

The Phoenix Model Market Partnership took note of how the improved viewer experience using a Broadcaster Application resonated with test audiences. As a result, they commissioned the development of a Common Application Framework that would provide to broadcasters a means to easily stand up a sophisticated Broadcaster Application while still providing a means to expand its capabilities in the future. This Framework provides all of the components required to provide this application with a common look and feel between services and most importantly also provided a means by which the major common application components used in the Broadcaster Application would be persistent or available between changes in services. That would result in speedier loading of the Broadcaster Applications and an improved viewer experience.

Using this capability, the broadcaster would still be able to bring to their own application a custom look and capability as part of their Broadcaster Application components but use the underlying common code used across many Broadcaster's Applications.

In a real-world situation, viewers are likely to switch from channel to channel. The Framework and Broadcaster Application for each broadcaster would be in a carousel or repeatedly sent from each service over a period. If the Framework was already loaded from a previous service, it would remain persistent and the receiver would only need to load the application files unique to that Broadcaster Application. This is possible because of a parameter known as the AppContextID. The AppContextID would remain the same from service to service for the Framework but would be unique for the individual Broadcaster Application. You can see this process in the accompanying graphic below.

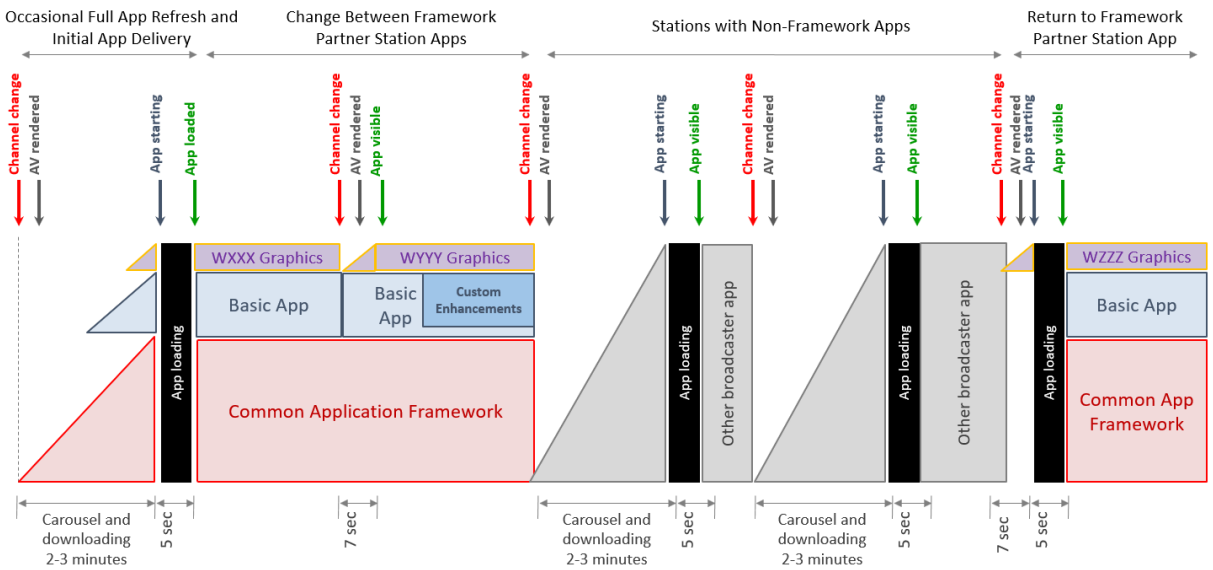

Carousel, Application and Service Changes

Therefore, the receiver's User Agent would look first to load the Framework as a result of the signaling information from the launch URL found in the HELD (HTML Entry pages Location Description) contained within the broadcast services' SLS signaling. Since the resultant Broadcaster Application Entry Page obtained from that URL may presumably already reside in the receiver with access through the receiver's Web Access Server, the receiver would not be necessary to load the Framework again. The receiver would only need to load the unique Broadcaster Application if it is not already resident in the receiver's App Context Cache. This results in speedier loading, reduction in resources required by the receiver and a common user experience. The download times shown in the graphic are illustrative of broadcast carousel service only. However, these times could be significantly improved with broadband delivery with a Internet connected receiver.

It must be mentioned that the Broadcaster Application when using the Framework can be provided at number of levels of sophistication which is totally up to the broadcaster. It may do as little as returning basic viewing data back to the broadcaster or display custom graphics and titles to the basic Framework's menu or it may provide a very sophisticated viewer experience with streaming components, deep linking and advanced capabilities such as polling or in-application purchase. Those choices are left to the broadcaster, but the basic Framework provides he basis and underlying capability to do all these viewer-friendly capabilities.

In the viewer receiver screen captures below you can see how the resultant Application may appear on a viewer's receiver. The graphics and titling are all from the Broadcaster's Application

in conjunction with the Framework's capability. The navigation in the menus in this case is by using the arrow buttons on the remote control along with the Select or OK buttons. These navigation action rules are controllable by the broadcaster within the application and use the receiver's control and status APIs

In this way the Broadcaster developed Application provides the customization, unique features and look to the basic underlying Framework which in turn provides the working frame environment, libraries, routines and sophisticated capabilities to the viewer's receiver graphical interface.

Common Application Framework-Based Application Examples

Reference

In this section you will find informative text and diagrams that are ancillary to the text of this document but provide support and further depth to this manual.

A Short Tutorial

INTRODUCTION

You cannot fully understand how to enable a NextGen TV signal on the air without first understanding, at least at a high level, how the ATSC-3 NextGen TV standard works.

No attempt is made in this explanation to include every detail which would require a far longer document. Also, it is recommended that a separate explanation of COFDM transmission is studied. However, there is an attempt to include enough information in this tutorial to help the reader understand the function as well as the terminology used at each point throughout the broadcast chain.

This very high-level view noted below is from the Open Systems Interconnection (OSI) model that organizes the functions of a telecommunications system without regard to their underlying internal structure and technology.

Its goal is the interoperability of diverse communication systems while making use of standard protocols. In short, each layer stands on its own with its own unique signaling. Each layer passes that data and descriptive tables that locates and describes content to be utilized or displayed by the receiver.

This also enables changes or upgrades in one layer's technology with minimal, if any, impact on the other layers. For example, a change in an encoder/decoder used in the presentation layer has minimal impact of the underlying layers of the system. Problems can also be more easily analyzed and isolated with a layered approach. In the figure shown above the theoretical OSI model is placed beside the layers as found in the current ATSC-3 standard. This is also referred to as the protocol stack.

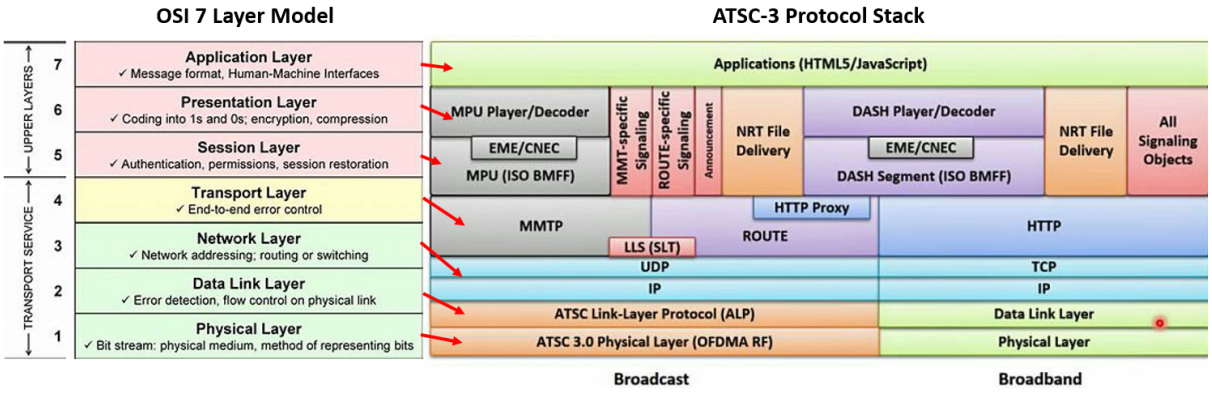

HEVC

The ATSC-3 standard requires the use of the ITU H.265 High Efficiency Video Codec or HEVC for video encoding. HEVC was developed in concert with the International Telecommunications Union, ITU, an international telecommunications standard and telecommunications coordination arm of the United Nations as well as the Motion Pictures Expert Group or MPEG, part of the International Organization for Standardization (ISO), charged with creating and publishing standards for encoding and compressing audio and video formats used worldwide. HEVC was developed as a natural progression or evolution of the MPEG-2 (used in ATSC-1) as well as AVC, ITU H.264 video encoding standards. HEVC provides the vast improvement in encoder efficiencies required for video at higher scan sizes (as in 4K) that are to become common in television streaming, recording and broadcast.

The HEVC codec can be configured in several profiles that set coding depth, scan configurations and so on. However, the ATSC-3 standard requires the use of HEVC Main 10, Main Tier, Level 3.1. This profile requires a color sampling of 4:2:0. The spatial resolution in horizontal and vertical dimension must be divisible by 8 (it will become apparent why in the subsequent text).

HEVC as used in ATSC-3 supports many legacy SD video, interlaced video or progressive video HD formats as defined in sections 6.2.1, 6.2.2, and 6.2.3 of the ATSC, A/341 HEVC standard. The legacy formats are included to maximize compatibility with the existing library of content that has an interlaced scanning structure and might also have an aspect ratio of 4:3. High Dynamic Range, Wide Color Gamut and High Frame Rate are only supported by progressive video formats. 2160 vertical line (4K) content is also supported.

At a high level, HEVC uses many of the similar techniques to compress the visual data as its predecessor's MPEG-2 and AVC codecs. All three of these basically similar codecs use analytical and mathematical techniques to compare and eliminate intra-frame (in the same frame) and inter-frame (consecutive frame) redundancies. The main differences in the three codecs are in the sophistication of the techniques used to analyze and express this redundant picture content. The individual sections of the images used in this analysis and comparison are described more efficiently as a mathematical coefficient rather than a data-wasting description of each pixel. Also, less data will be used if a section of a frame is described as identical to another section in the same frame or that of one in an adjacent frame.

MPEG2 as well as AVC break individual image frames into segments called macroblocks made up of many individual picture elements or pixels. These blocks vary in size depending on the detail that needed description (more detail, smaller blocks). A complex mathematical description

(Discrete Cosine Transform or DCT) is used to create complex luminance and chrominance coefficients for each of these blocks unless they were identical to other macroblocks in the same frame or adjacent frames. In that case the identical block only needs to be referenced. Although the calculation required to describe the macroblock is very complex, the data derived (called a coefficient) is likely smaller in data size than what was required to describe each individual pixel contained within a block. Thus, the image can be represented accurately with far less data. This is the very basis of video compression.

HEVC also makes use of many major improvements in encoding compression techniques. For example, it uses two types of compression algorithms to create the mathematical coefficients required. The two techniques are Direct Cosine Transform (DCT) as well as Direct Sine Transform (DST) that was not found in earlier codecs. Also, the segments or macroblocks found in earlier decoders have been replaced with a similar construct called the Coding Tree Unit (CTU) or also Largest Coding Unit (LCU). Simply stated, the encoder begins by analyzing the whole image frame in 64-pixel square CTUs. It should now become apparent why a modulo of 8 is required of height and width of a frame.

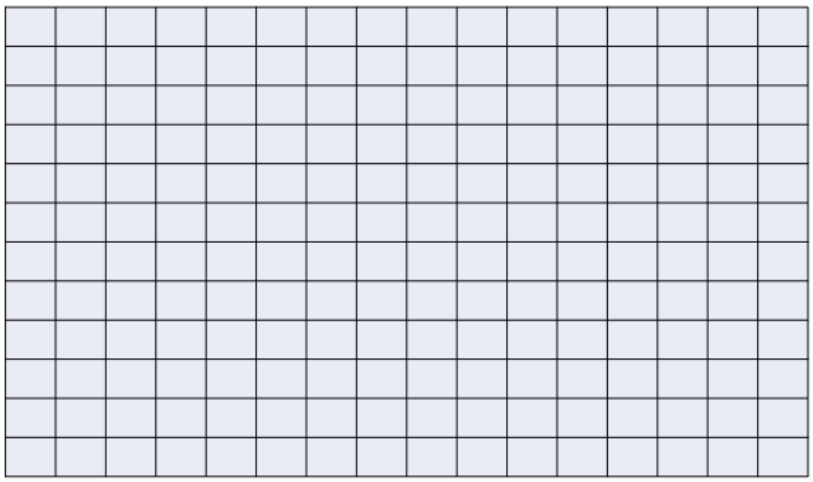

1024 by 768 64 Pixel Coding Tree Units

This overall analysis is done by the coding engine in the form of a decision tree. Each 64 by 64-pixel square CTU is further broken into 4-32 by 32-pixel luminance/chrominance units called Coding Tree Blocks or CTBs. In turn each of these blocks can be analyzed after being broken down into sub-blocks as small as 4 by 4 pixels, called Transform Units or TUs.

Also, CTUs are also sub-divided into Prediction Units or PUs. These 64 by 64 to 4 by 4-pixel units are used by the encoder to analyze inter-frame and intra-frame motion prediction and differences resulting from image movement. This technique is called Motion Compensated Predication which

in other forms has been used in earlier legacy compression standards. If the content of blocks does not substantially change but only move within the image frame or between frames, it is more efficient to describe the motion of the blocks from frame to frame (direction and distance) rather than re-encoding the whole block's coefficients.

AVC/MPEG 4 for example, uses nine vectors or directions of movement to describe this motion. In HEVC, thirty-five directions or vectors are available. Having more directions or angles, improves the object's smoothness of motion while reducing the codec's coefficient computational load. This improvement in efficiency is possible by not having to re-encode blocks that move at angles not available to the earlier standard's encoders.

HEVC has also added improved image tools used in intra-prediction, motion-prediction, motion-region-{image) merging, improved motion compensation and deblocking filtering (hiding the block encoding edge boundaries).

All of these additional processing techniques have provided an impressive increase in encoder efficiency in HEVC. Overall, with the same content quality result, HEVC is roughly twice as efficient as AVC/MPEG 4 (uses half the data bandwidth for the same video quality). In turn AVC/MPEG is twice as efficient as MPEG2 used in ATSC-1. Said in another form, HEVC requires only one quarter the data bandwidth of MPEG-2 to provide essentially the same visual quality. A 3 Mb/sec HEVC stream should look approximately the same in visual quality to a 12 Mb/sec MPEG-2 stream.

So, in short, HEVC uses a greater variety of analysis block sizes as well as advanced coding techniques to reduce the data required to provide similar or better video quality to earlier codecs.

HIGH DYNAMIC RANGE (HDR)

The discussion of High Dynamic Range in the context of video encoding is a very complex subject. Volumes have been written about the theory behind HDR imagery and why it improves video quality.

This text will only try to cover enough of this theory to provide a basic understanding of the subject as well as some of the techniques used to implement HDR in NextGen TV. However, to gain a full understanding of the subject, including many of the controversies associated with various techniques and their visual results, it is left to the reader with an open mind to view the various techniques' results for themselves.

What is image dynamic range? Simply stated, it the range of tonal values from the darkest part of the image in which you can still determine detail compared to the brightest part of the same image in which you can still resolve detail. This difference can be expressed in many forms, that have varying degrees of viewer objectivity. Below is an example of rendering of a lower dynamic range

grayscale image on the left that displays from a darker gray to a lighter gray level. On the right is a larger dynamic range rendering of from nearly totally black to as white as the background.

Grayscale of Lower Dynamic Range

Grayscale of Higher Dynamic Range

Often, HDR is confused with just the display's ability to render an extremely bright image or highlight. If that highlight still has detail, that image could be erroneously thought of as an HDR image. However, it is the depth the of the total tonal range that is critical. Below are two HDR images. Unfortunately, it is difficult to show the reader how HDR truly appears since any images shown are likely to be displayed on a device or publication with a narrower tonal range. However, it can be noted that bright areas of the skies of both these images shown below are properly exposed as are the far darker areas with a very wide tonal range.

One way is to express this difference or dynamic range is in f-stops. F-stops are an expression of a lighting ratio often used in photography of all types including television. Lens controls used to control the light to a film or video camera's imager often use this notation for reference. In short, a change in one f-stop to one lower number or lens "stop" doubles the amount of light passing through the lens (this system has a basis in a ratio, so a lower number raises the light level to the film or imager). Conversely, changing the f-stop to a higher number by one stop halves the amount of light passing through the lens. Two stops to a higher numbered f-stop provides one quarter the light and so on.

Using "stops" as a metric, SDR or standard dynamic range television (at either SDTV or HDTV resolution, both of which, in the consumer domain, utilize 8-bit video quantization) can represent roughly 6 f-stops worth of range from the darkest to the brightest levels. Professional SDR (10-bit video) supports about 10 stops of dynamic range. 10-bit sampled video equates to a light level ratio of roughly 1000 to 1. Even 10-bit coding using the SDR method is still far from the range needed for HDR imaging.

The SDR tonal range in television is not processed or transmitted in a linear fashion, however. The camera's images are processed to slightly increase the signal's value in the dark areas (to mask imager noise) as well as slightly compressing the signal in the gray and white areas (to mainly account for the opposite response of the display). This SDR transfer characteristic (as well as color gamut discussed later) between camera imager and display is documented in the ITU-R Recommendation BT.709. This pre-correction in image light tonal transfer characteristics is generally referred to as the image's "gamma" correction. The purpose in processing the image in this way ensures that the display's gray scale value will appear with a tonal value as needed to appear normal to a viewer on a typical display. Essentially, the optical (light) to electrical transfer characteristics of the imager and its processing is designed with the display's electrical to optical (light) transfer characteristics in mind.

Now in the past, it was difficult to expand the dynamic range of the image because the dark areas suffered from imager noise. Also, the imaging devices, processing amplifiers and displays would saturate (not provide more output with more light) at the highest light levels. Standard Definition displays are also generally lower in overall maximum brightness levels (because they did not need to display a higher tonal dynamic range). A consumer SDR display's maximum brightness level is typically in the 100 to 300 nit (candelas per square meter) range. "Nit" is a colloquial term commonly used instead of "candelas per square meter". It derives from the Latin word, nitere, meaning "to shine".

Also, the analog to digital convertors found in earlier cameras had insufficient quantizing bit depth to provide an increased dynamic range without providing noticeable quantizing noise. When these convertors were presented with more imager electrical (light) range, it needed to be spread across the same digital quantizing steps used in a narrower tonal range. This created objectional and visually resolvable steps in the grayscale, referred to as quantizing steps or noise.

Newer imagers and processing can now handle a greater imager electrical (light) range with more than 14 bits of quantizing. The resultant noise provided by the imagers is extremely low even after downscaling to lower bit depths (as in 10 bits). This is possible because of advanced scaling and noise reduction techniques. Therefore, the imagers and processing used in cameras can now handle dynamic ranges of up to 14 f-stops or more with minimal resultant quantizing noise in

dark areas of the image. High Dynamic Range is generally understood to refer to images created and rendered with about 14 f-stops of tonal range. For reference and comparison, the human visual system can resolve in a single scene (i.e., at a single state of visual "adaptation") a dynamic range of about 14 f-stops. Each of the two standardized HDR signal formats can provide this full level of dynamic range, assuming the display is up to the task.

This increased range cannot just travel from imager to receiver displays without processing as already mentioned. Most critical in this processing are the transfer characteristics of the camera's imager and display. The light to electrical transfer characteristics of the imager and the electrical to visual transfer characteristics of the display (and its maximum brightness) need to be considered as a whole. Part of that consideration is the brightest part of the image in which detail should be resolvable as well as the maximum brightness of the display screen. These two reference factors also differentiate the two major HDR systems used in ATSC-3.

If this imager to display transfer characteristic is not considered, the imagery will not be rendered such that the grey scale or tonal range will look appropriate to the viewer. This is referred to as the optical (camera light input) to optical (display light output) transfer characteristic.

Most modern HDR film and television cameras capture images with at least the required 14 f-stops of range. The transfer characteristics used in the PQ and HLG HD video systems are necessarily more sophisticated than those for SDR, in order to allow 10-bit video to represent a true high dynamic range. The PQ and HLG transfer characteristics for HDR are both documented in ITU-Rec. BT.2100, which also describes many other characteristics of HDR video including bit depths, color gamut, etc.

These two primary High Dynamic Range systems are available in the ATSC-3 broadcast standard (see ATSC A/341). Both are available in progressive scanning video formats, but not in ATSC-3's interlaced formats, since interlace is a legacy image format with no programming pre-existing in HDR. One system is based on a "PQ" (short for "Perceptual Quantizer") transfer characteristic that is described in the SMPTE ST 2084 standard. The PQ system is utilized in certain HDR system variants, each known by different names; they have various levels of enhancements involving static or content-dependent dynamic metadata, such as HDR10, Dolby Vision, and HDR10+.

These various PQ systems consider the assumption by the program's producers as to the maximum brightness of the display. In general, the brightness of an HDR display is considered in the range of 500 -1000 nits (or candelas per square meter). However, typically, a brightness level of 1000 nits (or candelas per square meter) is assumed to be a typical PQ, HDR reference display brightness. But, to be clear, other display values are practical and do exist. Display brightness

levels of 10,000 nits or more are used in outdoor displays for example. During post-production, the content's producer can be assured the display renders the image as it was wished to appear.

The second primary system is Hybrid Log-Gamma or HLG. This system was developed jointly by Britain's BBC and Japan's NHK. The goal was to provide a system that was based in the dynamic range of the scene which could be adapted to the capability of the receiver's display from SDR through varying brightness levels of HDR displays, but without any use of static or dynamic metadata, making it simpler for use in live production and broadcasting.

Interestingly, nearly all HDR television cameras made today provide only HLG-format HDR signals, because this provides the most practical approach to HDR television production.

As hinted earlier, these two systems have their proponents with different opinions expressed about which one does the job better. Realistically, both do about an equal job. Note that conversions are easily made when necessary, in commercially available real-time hardware, between the two HDR signal types.

One of the most important characteristics that is provided with HDR imagery is the fact these images are likely to appear noticeably "sharper" than those in SDR. This happens because your brain tends to perceive greater sharpness in images with higher contrast. The wider tonal range and increased contrast in HDR imagery provides that contrast. This apparent increase in sharpness is referred to as acutance. Acutance is defined as a psychophysical (eye-brain interpretation) rather than an objective measure of the actual sharpness of an image. Proper use of HDR imagery can bring more apparent sharpness to a 1080P transmission in many cases than the use of 4K imagery without HDR.

WIDE COLOR GAMUT (WCG)

The ITU-R Recommendation BT.2100 defines the tonal transfer characteristic required in HDR television also defines various aspects of Wide Color Gamut (WCG), including picture resolutions, frame rates with progressive scan, RGB quantizing bit depths, luminance-chroma color representations and chroma subsampling.

As background, the human eye has rods and cones in its retina. The rods respond to luminance only (generate no color perception) and play an important role in low light level vision, However, rods have relatively little effect on color vision perception. Also, the human eye's retina contains cones. There are three different types of cones that respond to red, green and blue color wavelengths. The eye and brain work in concert to use all the information generated by these three types of cones to interpret the color and brightness or luminance of an image.

The overall response of the eye and brain is shown below as a function of illumination version wavelength which corresponds to the perceived color. This graph is known as the CIE-1931 Luminosity response diagram. The CIE, The International Commission on Illumination (abbreviated CIE for its French name, Commission Internationale de l'Éclairage), is the primary international authority on light, illumination, color and color space.

The shorter wavelengths on the left are perceived as blue while the longer wavelengths on the right. are perceived as red. This curve assumes an equal amount of radiant energy is provided to excite each of the three-color cones to the human eye and what would be perceived. Said in another form, the human eye and brain do not have a flat or even response to the primary colors that make up the whole color space.

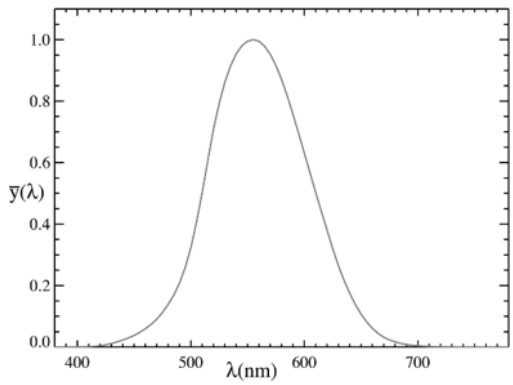

CIE-1931 Luminosity Response Graph

The CIE provides an alternative method to define the eye's visual response such that the components required to create visible colors are show taking to account only the relative values of the primary colors (without regard to luminance) required to render color.

This is referred to as the CIE-1931 Color Space Chromaticity diagram (independent of luminance) chart. The 400 to 700 µm color wavelengths are shown around the edge. The corners and tip of this curve indicate the areas of the primary colors. The volume of the curve indicates the relative eye-brain response to the various "shades" of the colors available. It is referred to as the color space, volume or visual gamut (complete range). This diagram is shown below:

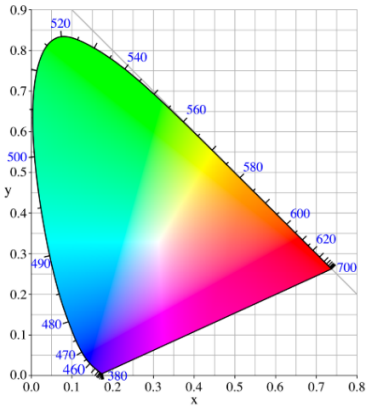

CIE-1931 Color Space Chromaticity Diagram

Shown in the left chromaticity diagram below is the defined recommended color space rendered though ITU-R Recommendation BT.709 for standard definition (non-HDR) HDTV. It is shown in the dark triangle within the total CIE-1931 visual gamut. This color response was limited in legacy BT.709 standard definition television equipment because of the filters used in cameras, individual color quantizing depth and phosphors found in earlier CRT displays. This limited color space compared to the human visual response led to difficulties in creating faithful flesh tones as well as rendering simpler areas such as green grass properly. Processing tricks were often used in receiver displays that endeavored to mask these shortcomings. But it always came at a loss in some part of the more complete color space.

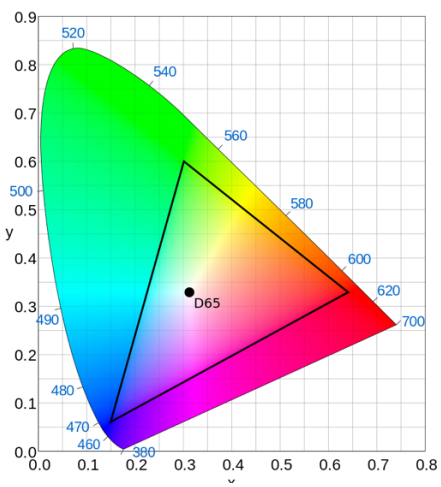

ITU Rec. 709

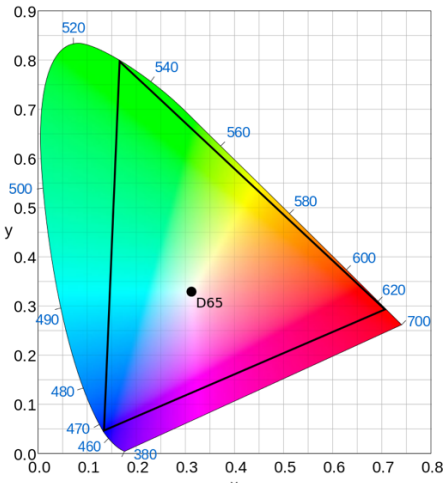

ITU Rec.2020

More recently in 2012, the recommended color space of HDTV was redefined/upgraded in gamut for UHDTV in ITU-R Recommendation BT.2020 (these color specs are also used in BT.2100 for HDR). This was made possible with the advent of improved camera imagers, filters, greater quantizing depths and the improved display's color rendering. This improved color space (again dark triangle within chart on the right in the diagram above) is shown on top of the same CIE-1931 chromaticity chart. This new, more representative color space compared to the human eye response is referred to as Wide Color Gamut or WCG.

BT.709 defines 8 bits of quantizing depth per color. This roughly defines 256 shades per primary color, more or less. Therefore, ITU-Rec.709 is capable of roughly 16.78 million colors.

BT.2020 stipulates either 10- or 12-bit depths. With 10 bits, a possible 1 billion colors (1,073,741,824) can be defined. With 12-bits, 68 billion colors (68,719,476,736) can be defined.

This vast improvement in color gamut rendition is only possible when all the transfer characteristics, bit depths and capabilities of HDR are used. Therefore, HDR and WCG go hand in hand.

HIGH FRAME RATE (HFR)

The ATSC-3 standard's HEVC supports 120-fps (frames per second) integer, as well as fractional frame rates. Higher frame rates improve the viewer experience by smoothing motion occurring within the television image. This provides more immersive imagery for high motion content such as in sporting events with fast motion. However, not all receivers can display higher frame rates.

If the receiver can display just, 60 fps, for example, the receiver/display could be designed to just disregard every other frame. That should solve the compatibility of less-capable displays.

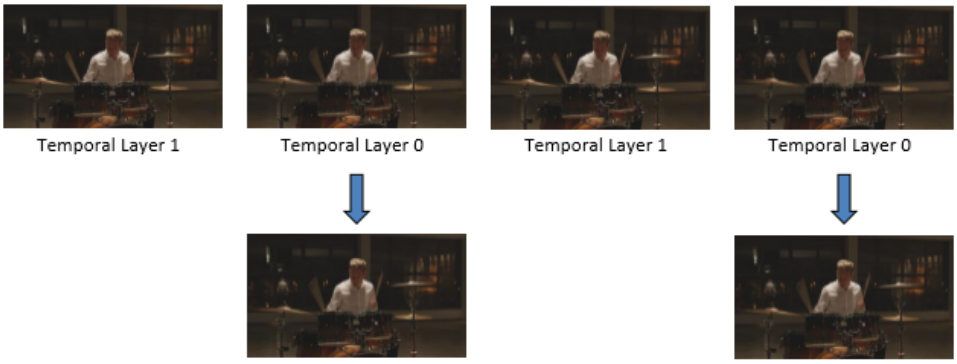

Simple Frame Rate Conversion

However, there is another, not as obvious, issue if this method is used. At 120-fps, the length of each frame in time is just 1/120th of a second. You can think of this as the equivalent of the shutter speed in use in each frame. Therefore, if alternate frames were dropped to make the HFR 120-fps signal compatible with 60-fps displays, there will be a "jump" of 1/120th of a second in motion after every 60-fps displayed frame. Each frame would be sharp with minimized motion blur, but the step created in the motion will be noticeable when the adjacent frame is skipped. This step in motion will likely be objectionable to a viewer when displayed for 1/60th of a second frame length of a 60-fps display. Technically, this creates a temporal (time related) artifact and can be a source of viewer annoyance. This is sometimes referred to colloquially as "strobing".

A technique called Multiple Frame Rate Temporal Filtering allows for a means to efficiently deliver HFR video while remaining compatible with lower (reduced) frame rate displays with longer display intervals. When no temporal artifacts are desired, the ideal streams transmitted would be 120-fps video with a 1/120th second shutter interval along with 60-fps video with a 1/60th of a second shutter interval. The diagram below describes a method of creating these two compatible video streams.

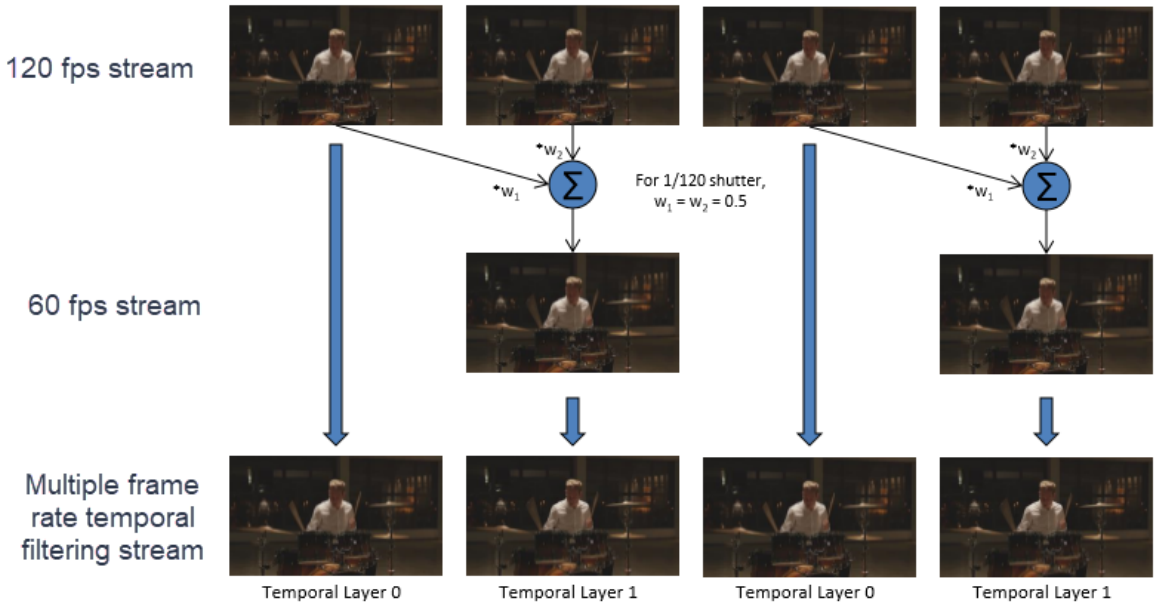

Multiple Frame Rate Temporal Filtering

In the resultant HFR video stream shown, a standard 60-fps frame rate stream is created by dropping every other frame but avoids the artifacts mentioned earlier. Temporal filtering simulates a 1/60th second shutter interval by averaging the current and previous frames of the

HFR video stream shown above in Temporal Layer 1. However, because modern solid-state imagers used in video cameras often have independent shutters that shorten the shutter period to a duration lower than the frame period (as in, let us say 1/240th of a second) to control imager sensitivity. Trying to blend these even shorter frame periods can cause double images as seen below.

In this case, it may be desirable to use a weighted average rather than a double image. This results in a strong primary image and a less-perceptible secondary image. This balances the negative effects of other sources of temporal artifacts. By using this technique, the eye is drawn to the stronger image, rather than the secondary, ghost image, while the secondary image helps fill motion step with an in-between image.

So, to improve the image above, the 60-fps receiver display should use Temporal Layer 1 that contains the blended average display created by the additive nature filtering systems.

However, this now leaves a 60-fps temporal artifact for the 120-fps display. Therefore, in the case of the 120-fps display system a reverse process to that used in the temporal filter of the encoder is applied to the alternate temporal frames received. In that way the original stream is recovered to its original temporal flow and will be properly displayed on a 120-fps display without artifacts.

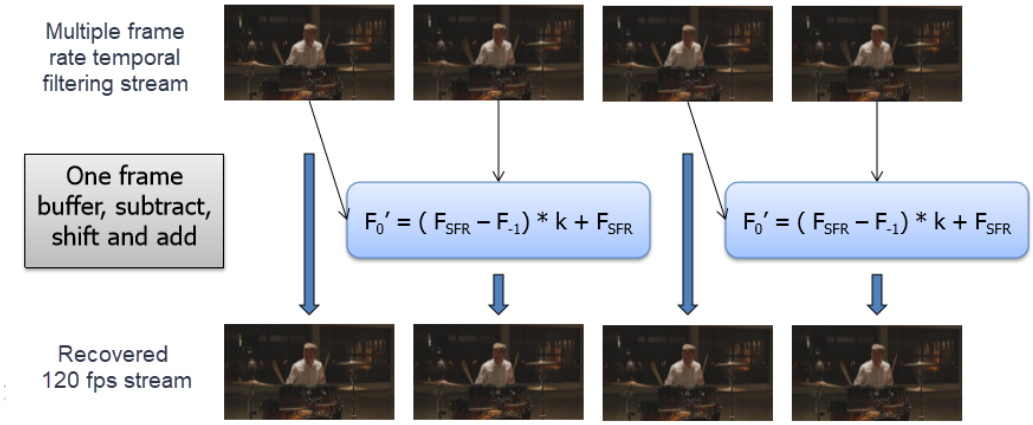

Multiple Frame Filtering Temporal Filtering 120fps Recovery

AC-4

The AC-4 is designated as the audio encoding codec in ATSC-3 NextGen TV in North America (MPEG-H is used in Korea). The AC-4 audio codec was developed Dolby Labs as a proprietary system and adopted by the ATSC for use as an alternative Next Generation Audio codec for use in NextGen TV. As with the video compression standard, HEVC, AC-4 is at least two generations more efficient than the audio codec used in AC-3, the audio codec designated for ATSC-1. Also, with the new codec, broadcasters can retain their current audio workflows indefinitely while having the optional use of many of AC-4's most advanced and useful features.

AC-4 supports the carriage of multiple audio Presentations in a single bit stream. Information provided as metadata for each Presentation includes instructions for selecting and mixing Audio Program Components. The AC-4 "Table Of Contents" (TOC shown in the diagram below) contains a list of one or more Presentations that are carried in the data stream. Presentations consist of substream groups, where each substream group has a specific role in the user experience: Music & Effects, Dialog, Associated Audio, etc. substream groups can be shared between Presentations so that parts common to several Presentations do not need to be transmitted twice. The use of this agile metadata provides the ability for the viewer to select custom languages, dialog and descriptions with minimal bandwidth impact.

A Presentation informs the decoder which parts of an AC-4 stream are intended to be decoded simultaneously at a given point in time, describing available user experiences. Features such as loudness and dialog enhancement are also managed by the Presentation.

The diagram below shows an example AC-4 TOC with several Presentations for M&E with different language-dialog substreams. The selected Presentation contains the 5.1 M&E substream, and an English dialog substream.

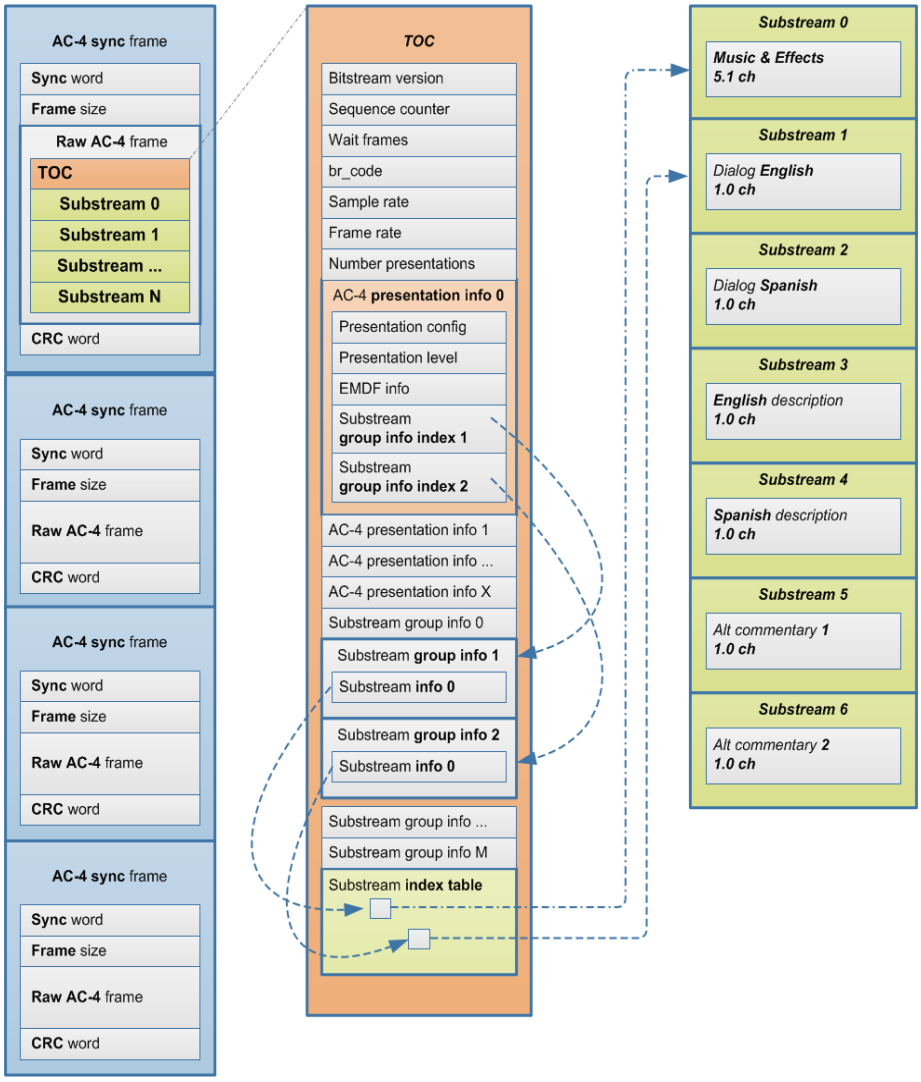

AC-4 Table of Contents

DIALOG ENHANCEMENT

AC-4 allows the viewer to tailor the program dialog level to suit their preference. This technology works with both legacy content that contains dialog mixed into the main audio as well as new content where a separate dialog track is available to the AC-4 encoder. Dialog Enhancement is implemented by utilizing the power of the audio encoder to analyze the audio stream and generate a highly reliable parametric description of the dialog, independent of whether a separate dialog track might be available. These parameters are sent with the audio in the AC-4 stream as metadata and can used by the receiver's decoder to control the dialog's level under user control.

AC-4 decoders in receivers use this parametric description to perform the Dialog Enhancement. There is no action needed by the broadcaster from an operational side to enable or activate this feature.

DATA RATE EFFICIENCY

AC-4 provides significant compression efficiency improvement over AC-3. For example, AC-3 is commonly used at a data rate of 384 kbps for delivering a 5.1-ch Complete Main mix. With AC-4, broadcasters are able to use data rates of between 96 kbps and 144 kbps to deliver the same 5.1-channel audio with nearly identical quality. In order to provide margin for operations that might require downstream transcoding or other operations, the table below shows the recommended minimum data rates for stereo and 5.1-ch configurations.

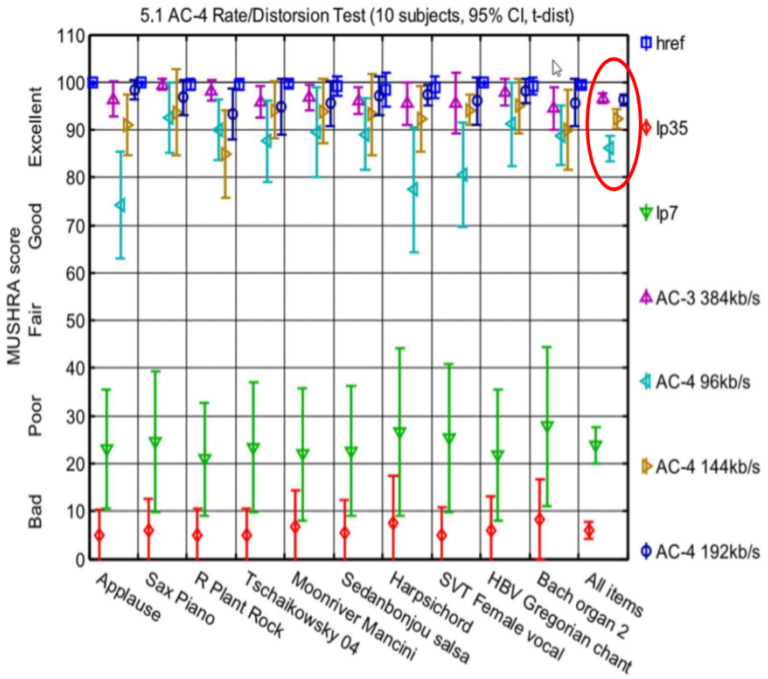

A/V SYNC AND FRAME ALIGNMENT

The A/V frame alignment feature of AC-4 avoids complex problems that can occur when trying to keep content in sync at segment boundaries, without compromising the audio at switching points. When enabled, this feature simplifies splicing workflows. It also simplifies transcoding from or to formats that use video-based data frame alignment, such as HD-SDI.

AC-4 audio frames may be coded at the same time interval as the associated video frame. With this frame alignment, audio can be passed transparently through a cable, satellite, or Internet Protocol

Television (IPTV) turnaround facility, eliminating the need to decode and re-encode audio to correct time-base differences or to perform switching/splicing. All common integer and fractional video frame rates are supported. To select the correct frame rate and time-align the audio frame boundaries to video, the AC-4 encoder is provided with reference timing information. There is a direct whole-frame relationship between video and audio frames from a reference time, such as at the start of a coded video sequence or at a random-access point (RAP).

This A/V sync time alignment is a critical feature that facilitates accurate metadata delivery, switching and splicing throughout the content delivery workflow. The delivery of metadata is crucial for viewer's discovery and selection of many of AC-4's most advanced features. See Figure 4.1.

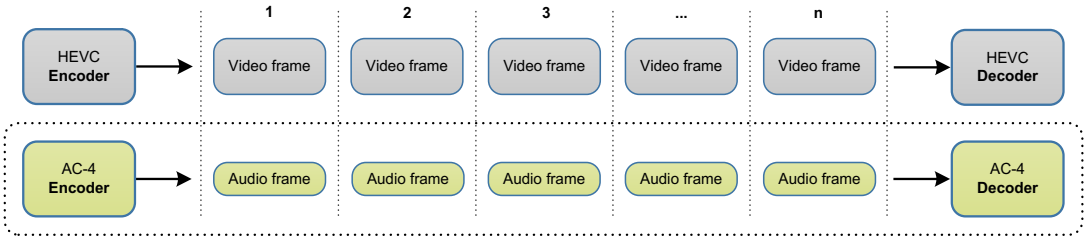

DIALOG ENHANCEMENT

AC-4 provides user-controllable enhancement of dialog intelligibility during decoding. The AC-4 system generates dialog enhancement information in the bit stream for all content, including content that has the dialog pre-mixed with other elements. The ability for a receiver to control dialog enhancement can be configured at or signaled to the AC-4 encoder based on broadcaster or programmer guidelines. Receiver decoders also need to be provisioned to provide viewer access to this feature. Recent consumer polling indicates that AC-4 dialog enhancement is one of AC-4's most desirable.

EXTENSIBLE METADATA DELIVERY FORMAT SUPPORT

The AC-4 bit-stream includes support for the carriage of Extensible Metadata Delivery Format (EMDF). EMDF provides a structured and extensible container for additional user data (for example, third-party metadata and third-party application data) to be carried in AC-4 bit-streams. This metadata is critical for accurate representations of the streams in packagers as well as viewer-facing content control and feature labeling in receivers.

LOUDNESS CONTROL

The loudness metadata included in the AC-4 elementary stream allows for a full range of parameter description, including:

- True peak and maximum true peak
- Relative gated loudness values
- Speech gated loudness values
- Dialog gating type
- Momentary and maximum momentary loudness
- Short term and maximum short-term loudness

DYNAMIC RANGE CONTROL

The Dynamic Range Control (DRC) elements of AC-4 provide a flexible set of options to address a wide variety of device profiles and user applications. This includes legacy AC-3 DRC profiles as well as custom DRC profiles that can be defined for an output mode (e.g., home theater, flat panel TV, portable speaker, and portable headphones). Control of the Dynamic Range can be exposed to the viewer by activation in the encoder and a user facing control in the receiver.

INTELLIGENT LOUDNESS MANAGEMENT

In addition to the carriage of an enhanced set of loudness metadata beyond dialnorm, AC-4 incorporates a means to verify that the loudness information carried in the AC-4 bit-stream correctly describes the accompanying content. The system can use this means to signal to devices after decoding that the loudness metadata is accurate and no further loudness processing is needed. This behavior protects the audio from additional and unnecessary processing that can degrade audio quality. The AC-4 encoder incorporates a real-time loudness normalizer that can be dynamically enabled when the incoming loudness metadata cannot be validated.

TARGET DEVICES

AC-4 supports device-specific metadata to optimize rendering based on output-device characteristics. Target-device metadata can optionally enable conditional authoring and rendering based on output speaker configuration. This feature gives content creators artistic flexibility for creating an optimal sounding mix for all output speaker configurations without the compromises of downmixing.

ALTERNATIVE METADATA

Alternative metadata supplements existing object metadata to allow different renditions of the same object to be created for each Presentation. Alternative metadata can also be defined for each target device.

ADVANCED SINGLE-STREAM AND MULTI-STREAM (HYBRID) PRESENTATIONS

AC-4 enables advanced single-stream Presentations by carrying multiple Audio Program Components in a single AC-4 bit-stream. This allows all Audio Program Components of a single Presentation, as well as components of multiple Presentations, to be carried within a single AC-4 bit-stream. Hybrid delivery uses transport of one Audio Program Component over a first path, such as a broadcast path, and one or more Audio Elements over a second path, such as broadband (Internet) or an alternate ATSC 3.0 physical layer pipe. AC-4 supports advanced multi-stream Presentations to enable hybrid-delivery use cases.

CORE AND FULL DECODING

The AC-4 decoder has two decoding modes: core decoding and full decoding. Core decoding enables a low complexity decoding of a complete audio Presentation for devices with limited output capabilities (e.g., mobile devices, tablets, televisions, etc.). Full decoding enables a complete audio Presentation for devices with expanded output capabilities (e.g., Audio/Video Receiver). The choice of decoding mode enables a single bit stream to be compatible with a wide range of device types and applications.

HIGH SAMPLING FREQUENCIES

AC-4 supports high audio sampling frequencies of 96 kHz and 192 kHz. However, the ATSC 3.0 standard constrains the sampling frequency to 48 kHz. The AC-4 bit-stream is structured such that bit streams with high sampling frequencies can be decoded to PCM at 48 kHz without any penalties.

This feature minimizes the complexity of decoders that do not need to support high sampling frequencies.

SEAMLESS AUDIO SWITCHING

DASH transport allows transitions between Representations within the same Adaptation Set in order to optimize playback quality for changing network conditions. AC-4 enables seamless switching between AC-4 streams of the same media content with the following types of configuration changes:

- Bit-rate changes
- Channel-mode changes
- Frame-rate changes where the higher frame rate is a factor of two or four times the lower frame rate (e.g., from 48 to 24 fps and vice versa)

IMSC1 Closed Captioning

ATSC-3, NextGen TV requires the use of a form or profile of W3C's Timed Text Markup Language (TTML) for representing subtitles and closed captioning. The IMSC1 profile is an XML-based W3C standard of Timed Text is both constrained as well as expanded by some of the features found in the SMPTE Timed Text (SMPTE-TT) profile as defined in SMPTE RT 2052-1. Making use of the full SMPTE-TT profile would be more complex than necessary to meet the closed captioning and graphic subtitle requirements of NextGen TV. So, the W3C's IMSC1 profile was selected for use for closed captioning in NextGen TV having been designed specifically for broadcast as well as broadband delivery. NextGen TV will use both the image (subtitle) and text sub-profiles that are also part of IMSC1. The relationships of some of the many Timed Text profiles with its constrained and expanded relationships are shown in the graphic below.

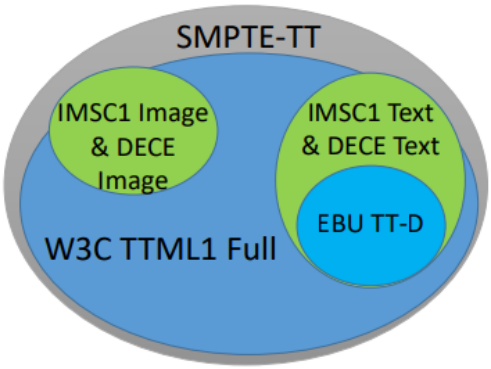

SMPTE-TT, and IMSC1 Profile Relationships

IMSC1 uses XML to describe its content, timing, layout, and styles. IMSC1 is very similar to HTML-5 with CSS (Cascading Style Sheets) in concept. In fact, most IMSC1 styles have a direct equivalent in CSS.

IMSC1 supports world-wide language and symbol tables. It is already in use by various other media delivery systems including Internet. As part of the SMPTE-TT profile IMSC1 provides FCC closed caption safe-harbor for IP delivered captioned content. It also can support the FCC requirements for CTA-708 and IP captioning. It provides a means to "tunnel" CTA-608 and 708 legacy captions using the SMPTE ST 2052-11 recommended practice. It also has near direct compatibility with EBU-TT being deployed in Europe.

As mentioned, there are two IMSC1 sub-profiles. The Text Profile requires a font rendering engine in the decoder. The Image Profile is required to render and display PNG subtitle files.

REFERENCE

SYSTEM ARCHITECTURE

IMSC1 content "document" containing captions and subtitles can use one or more ISO BMFF track files, each of which containing one or more XML documents.

Each IMSC document is self-contained and combines content, timing, layout and styling information. The content of the document is structured using tags like those used in HTML such as <body>, , <p>, , and <br>. Timing and styling are expressed using attributes such as begin, end, color, tts:backgroundColor, tts:fontSize, tts: fontFamily . These are common concepts to anyone familiar with CSS.

IMSC1 defines the structure of graphic subtitle content as well within the XML document. It consists of a series of elements, which you can use to enclose, or wrap, different parts of your subtitle content to make it appear in a certain way or appear and be removed at a certain time. Many of these are similar to or the same as HTML features.

IMSC1 does differ from standard HTML in several ways, however, here are just a few of those differences:

- IMSC uses namespaces, so that tts:fontSize is not the same as fontSize, and namespace declarations are required, like
  <tt xmlns="http://www.w3.org/ns/ttml"
  xmlns:tts="http://www.w3.org/ns/ttml#styling" ...>
- IMSC has stricter rules, for instance <p> elements can only be present within elements and cannot be direct children of <body> elements.
- While attributes names and syntax are similar, styling differs from CSS in a couple of ways:
  - CSS properties use hyphens, like font-size, where IMSC uses camelCase, like tts: fontSize.
  - IMSC does not use external stylesheets.

Some of the more important IMSC1 semantics are as follows:

- <tt></tt> — You must always start an IMSC1 document with the root element <tt>. You should also specify the default namespace of the document by using the xmlns attribute.
- xml:lang — You must specify the language of your content with the xml:lang attribute. Note that the lang attribute must have the prefix xml:, unlike HTML. In IMSC1 <tt lang="en"> is not correct — you always must write <tt xml:lang="en">.
- <body></body> — As in HTML, the <body> element contains all content that you want to show. For IMSC1 this is typically subtitle content that you want to show at certain time intervals during the playback of a video.
- — The element is used as a container for subtitle content; you always need to have at least one of these. The <p> elements that contain the actual subtitle content always have a element as its parent.

- — Text content for subtitles must always be wrapped in a element. The element describes a paragraph of text, in a similar fashion to HTML. The main difference is that it can be timed.

As the Timed Text name implies the time of display and removal of the text or subtitle graphic is controllable in IMSC1. Without the use of timing statements, the text or subtitle content will be shown during the complete duration of the video. That is likely undesirable. Instead you would likely want text and subtitles to show up at a certain time and then disappear a designated time.

This requires the use of the following timing attributes:

- begin — specifies when the subtitle shall start to show (in this case below 12s after the video started).
- end — specifies when the subtitle shall disappear (in this case 15s after the video started).
- dur — specifies when the subtitle shall disappear after it is first applied and is used instead of the end statement.
- There are also options in how the display timing is stated. It can be in seconds from the start of the content in hh:mm:ss:ff format also from content start or in "wall clock" time.

Background and text colors can also be controlled as well using the following attributes:

- tts:backgroundColor — This attribute sets the background color on the element it is applied to. In this case it is applied to the element, or more correctly to the area that is generated by the
- element. The default background color is transparent.
- tts:color — This attribute sets the text color on the element it is applied to. The default text color is white.
- Text and background colors can be annotated in several ways with color names as in lime or aqua, hexadecimal values as in #00ff00 or #00ffff or RGB values as in rgb(0,255,255) or semi-transparent variations, as in rgba(0,0,0, 80).

Below is a very simple example of IMSC1 XML document that applies the text "NextGen Television" on the screen 12 seconds after the video starts and removes it 3 seconds later or 15 seconds from the start of the video:

```
<?xml version="1.0" encoding="UTF-8"?>
<tt xml:lang="en" xmlns="http://www.w3.org/ns/ttml"
xmlns:tts="http://www.w3.org/ns/ttml#styling">
<head>
   <layout>
      <region xml:id="area1" >
   </layout>
</head>
 <body>
   <div>
      <p region= “area1” begin="12s" end="15s">
        NextGen Television
       </p>
   </div>
</body>
</tt>
```

Also, when the source of IMSC1 captioning information is a translation from CTA-708 (for these purposes all references to CTA-708 are CTA 608 carried within CTA-708 with compatibility bytes), the conversion into IMSC1 should follow the recommendations of SMPTE RP2052- 11 within the IMSC1 XML text "document".

BASE64 is generally designated and used to represent this digital data, so the text-only "document" can be included within the IMSC- ISO-BMFF wrapper. This methodology is often called “tunneling” because the attributes and digital form of the legacy code is fully retained.

This method can be used with or without a converted IMSC1 XML version of original closed captioning source. If it is used with, it is suggested breaking the tunneled BASE64 code into "blobs" over the length of the IMSC1 converted document in order to facilitate synchronization, fragmentation, random access and live broadcast requirements.

WORKFLOW

There are three possible major closed captioning workflows likely to be used in broadcast television. The first is the direct conversion of legacy CTA 708 digital captions to IMSC1 Timed Text. To provide more options for downstream processing, e.g. at MVPD interfaces, they would be improved by having the original CTA-708 information available within IMSC1 document by “tunneling” that data as described earlier following the recommendations of SMPTE RP2052-11.

CEA-708 captions do not define an intrinsic “presentation time”, but instead rely on the frame delivery time of the caption packets. In order to map CTA-708 data to IMSC1, the concept of “significant moments” is used, which are the times at which the CTA- 708 display changes. An

example of an event which causes a significant moment in CEA-708 would be the DisplayWindows command. The delivery time of this command would need to be converted to a begin attribute value on the respective IMSC1 elements. The text on display as a result of the command being executed would be converted into the contained IMSC1. Despite this time of display requirement, many of the other display attributes held within CTA-708 can be retained or even enhanced.

The next workflow likely to be encountered is when the content comes from a pre-recorded and/or post-produced scripted source. In that circumstance a Timed Text file converted from the verbatim script coupled with the time of the dialog contained in the captioning can be directly converted to IMSC1 along with the attributes required by the production. A diagram showing that workflow is shown below.

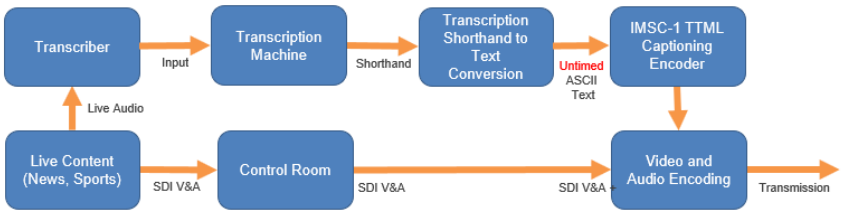

Lastly, there is the circumstance in which live content, i.e., content that is authored in real time without prediction of the future layout. Essentially, the content should be displayed immediately when it arrives at the decoder keeping in mind the best attribute and display practices as indicated in the ATSC -3 Standard A/343. That workflow is indicated in the diagram below:

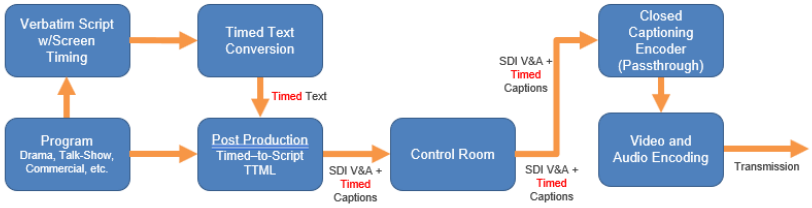

This section was meant to provide a simple explanation of how IMSC1and Timed Text works. A full explanation of all the semantics, syntax, form, attributes and tags required is available in many online references such as in https://www.w3.org/TR/ttml-imsc1/

Signaling

BACKGROUND

One of the more critical functions within the NextGen TV system is its use of service signaling to aid the receiver to find the signal, identify what services are present and determine the parameters the receiver requires to decode as well as present the available services. Signaling does all this along with many other important tasks that benefit the system's capability and viewer experience.

Signaling is a critical feature of the NextGen TV system, being fundamental to its capabilities. Without the ability for the NextGen TV signal to provide this information to the receiver, the receiver would require far more sophisticated capabilities to discover the basic RF signal as well as find and decode each individual service. Without signaling, the receiver would be required to present to the viewer a series of options about which of the many services found in the RF signal are they interested in viewing. These alternatives are clearly impractical. Therefore, the signaling tables are provided within the NextGen TV signal to simplify receiver design, enhance channel and service content discovery to improve the viewer experience.

The NextGen TV signal is provided with these signaling tables that found within the different abstraction layers as seen below. They are present in many of the layers of the NextGen TV signal.

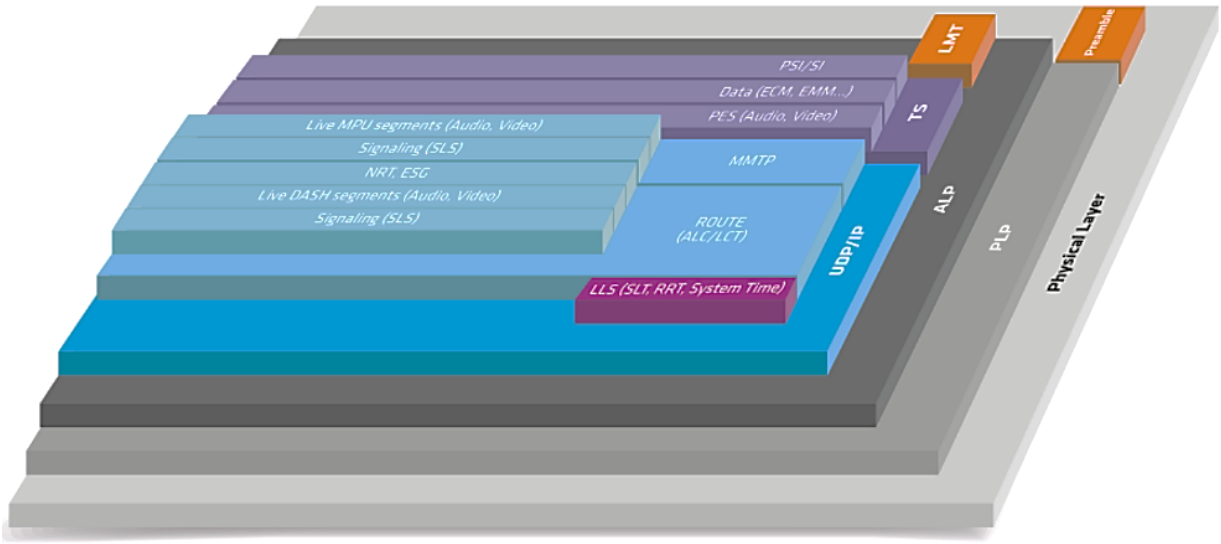

Signaling in the Abstraction Layer Context

Courtesy Enensys

Additionally, these tables do a whole series of additional tasks. They provide details of the component streams that make up an A/V presentation and provide information critical for content security as well as system time which is critical for audio and video synchronized playback. They also include the content advisory ratings to inform the viewer if the content is appropriate for the intended audience. In addition, signaling provides emergency notifications, as well as information about the broadcaster application loading and so much more.

BOOTSTRAP

The Bootstrap is a signaling table of sorts because at its very basic level it provides channel frequency offset estimation, system bandwidth, emergency alert wake-up information, and important data on physical frame versioning. Also, it provides the minimum time to the next sub-frame of the same major and minor version of the Physical Layer and information required to decode the Preamble.

Below is a graphic from the ATSC-3 A/331 Signaling, Delivery, Synchronization, and Error Protection document that is often used to depict the Bootstrap signal used in NextGen TV. While the channel bandwidth in North America is 6 MHz, the bandwidth of the Bootstrap is only 4.5 MHz. This provides major components that contribute to this signal's robust nature. First, the modulation and coding required is rugged. Also, since it is only 4.5 MHz in bandwidth, more transmitter energy can be provided to this signal. As well, because Preamble carriers are 750 kHz removed above and below the channel edge (if there is no frequency offset) there will be a reduction in adjacent channel interference. All these factors improve the robust nature of this critical signal.

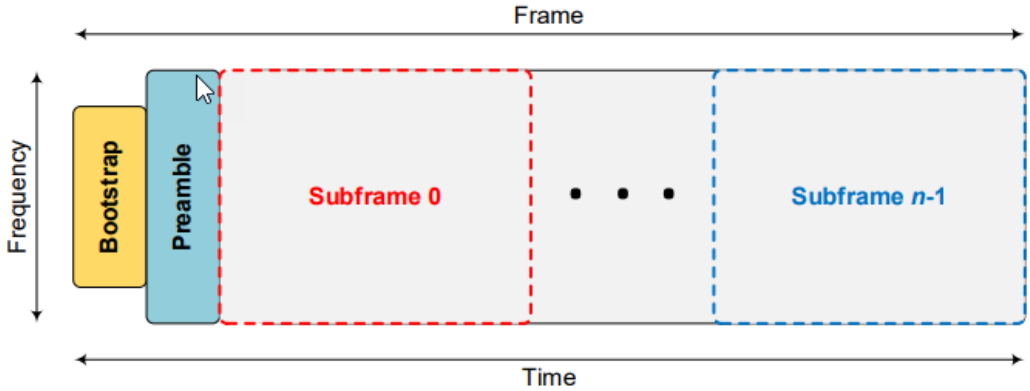

Simple Bootstrap, Preamble and Frame Structure

The Bootstrap consists of four COFDM symbols in a single Physical Layer versioned system at a total length of 500 µ/secs. The Bootstrap begins with a synchronization symbol positioned at the

start of each Bootstrap period to enable signal discovery. The first information signaled is the version of the ATSC 3.0 Physical Layer standard. The version will be signaled in the values used for all bootstrap symbols in the frequency domain with a mathematically-based Zadoff-Chu sequence and by a pseudo-noise (PN) sequence The Zadoff-Chu root and PN seed shall signal the major and minor versions of the bootstrap, respectively. Major version changes will have a different Zadoff-Chu root while minor versions will have a different PN seed. The sequence and seed are added to modulate in the frequency domain the symbols as seen in the diagram below from the ATSC A/331 Signaling, Delivery, Synchronization, and Error Protection document.

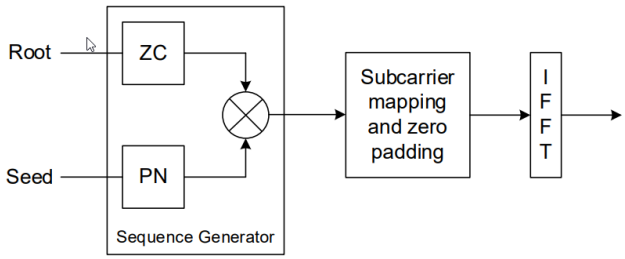

Physical Layer Signaling Using Zadoff-Chu Root and PN Seed from A/331

The second bootstrap symbol carries the first Emergency Alert Service (EAS) wake up bit, system bandwidth (6, 7, 8 and >8 MHz options) fragment, and the time element to the next frame of the indicated PHY version (i.e., with the same major and minor version numbers, with a range of 50 µs to 5.7 s).

The third bootstrap symbol carries the second Emergency Alert Service (EAS) wake up bit as well as the sampling rate used in the current frame, that follows the equation: $(N + 16) \times 0.384$ MHz. N is the signaled value and shall be where N can take values of 0 to 80, inclusive. The value of N for a 6MHz channels in North America is 18.

The fourth bootstrap symbol signals the parameters required to start demodulation and decoding of the Preamble Layer 1 Basic Signaling.

Preamble

The Preamble (Layer 1 Signaling) occurs once every Physical Layer frame and begins immediately after the end of the Bootstrap and before the payload. It also should be considered as a signaling table because it provides the receiver with the information it will need to demodulate and decode the Physical Layer frames and sub-frames. The Preamble is made up of two sections. The section named L1 Basic signals all the information required to demodulate and decode the section of the preamble known as L1 Detail as shown in the diagram below.

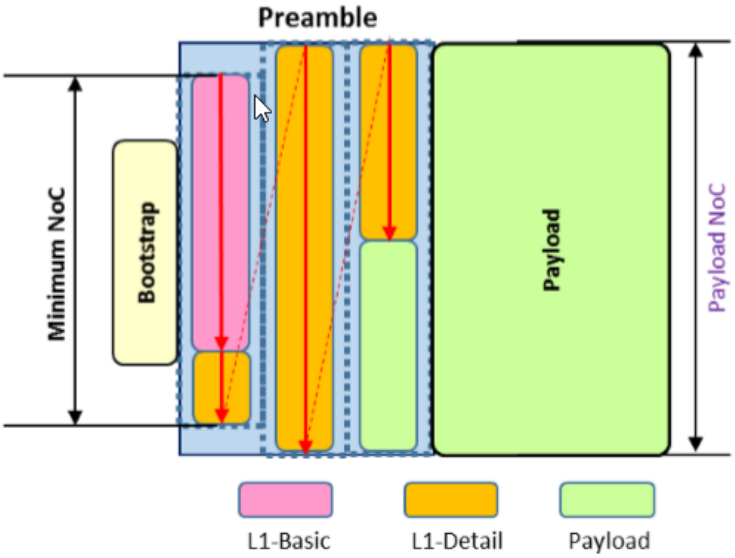

Preamble Details

The L1-Basic, which is confined to the first Preamble symbol, carries a fixed number of 200 signaling bits that are used to indicate the modulation and coding parameters of the L1-Detail portion of the Layer 1 signaling. It includes whether an LLS (Link Layer Signaling) can be found in the PLP frame or subframe. It also signals if timing information is available in this frame as well as what is its precision. As well, it indicates if there is a Dedicated Return Channel as well as any PAPR measures being employed in transmission. Additionally, it signals the receiver as to whether the Physical Layer is time or symbol aligned. It gives the frame length in time aligned mode (from 50 ms to 5 sec). In the time aligned mode there may be excess samples in the symbol of the frame does not align with the sample periods. The amount of the excess samples is signaled here. There is a procedure described in the standard for dealing with these excess samples. In the symbol aligned mode the L1 Basic indicates the number of samples between a nearest symbol to a millisecond boundary as well as how many samples must be added to the end of a Physical frame to match a sampling clock alignment. The L1 Basic also signals if the L1 detail has been modified as well as the length of the L1 Detail in bytes (400 ~ 6312). The forward Error Correction used in the L1 Detail is also indicated. If subframes are utilized, the coding parameters are provided for the first subframe as well in L1 Basic to facilitate receiver lock.

L1 DETAIL

The L1 Detail carries a larger number of signaling bits that vary between 400 and about 6312 that convey configuration parameters in a table. This table provides system time based in PTP to the nanosecond from the beginning of first sample of the first symbol in last Bootstrap as well as all the various PLP modulation coding and multiplexing parameters of the frame or sub-fames that follow.

LLS – LOW LEVEL SIGNALING

The LLS contains a series of tables that support rapid RF channel scanning and service acquisition by the receiver. It accomplishes this through its Service List Table (SLT) which in turn points to the Service Layer Signaling Table (SLS) which in turn provides information for discovery and acquisition of ATSC 3.0 services and their content components. LLS is transported in IP packets with required fixed IP address 224.0.23.60 and destination port 4937/UDP. The complete LLS is made up of these tables:

- SLT – Service List Table
- RRT - Rating Region Table
- SystemTime
- AEAT- Advanced Emergency Alerting Table
- OnscreenMessageNotification
- SMT – SignedMultiTable
- CDT – Certificate Data Table

The LLS must be transported in IP packets with address 224.0.23.60 and destination port 4937/udp. All IP packets other than LLS IP packets must carry a destination IP address that is either allocated and reserved destination addresses in use are unique in a geographic region or in the range of 239.255.0.0 to 239.255.255.2553, where the bits in the third octet shall correspond to a value of the service's major channel number with some caveats. Those caveats involve unique corner cases and ATSC A/331 Signaling, Delivery, Synchronization, and Error Protection should be consulted before assigning these IP addresses.

SLT – SERVICE LIST TABLE

The Service List Table provides signaling information which is used to build a basic service listing and provide bootstrap discovery of SLS - Service List Table. The SLT identifies the Broadcast Stream ID (BSID) of the service. It provides the URL for the Electronic Service Guide (ESG) for the service for use by the receiver. It tells the receiver if one or more components of the service are service content protected (encrypted). It provides the major and minor (channel) number of the service. It identifies the service category (linear A/V, audio only etc.). It gives the short name of the

service (as in call letters). It allows for the service to be hidden (as in for testing). It indicates if broadband is needed to provide the full service (as in video from OTA and audio via broadband). It includes the data required for content security control. It indicates if this same service is carried as an ATSC-1. It also indicates what the TSID and major and minor numbers are for that service. Most importantly it provides the IP address and port number for the service layer Signaling (SLS). A ROUTE Extended FDT element is also required since the SLS is contained in a ROUTE session. In the case of use of MMTP transport, the following MMTP messages will be delivered by the MMTP session signaled by the SLT in the form of MMT Package Table (MPT) found in the SLS. The MPT contains the list of all assets and their location information. MMT ATSC3 Table (MA3). Table carries system metadata specific for ATSC 3.0 services including Service Layer Signaling Media Presentation Information (MPI) Table. This table contains the whole document or a subset of a document of presentation information.

RRT – RATING REGION TABLE

This table is similar in concept to the Rating Region Table found in the ATSC A/65 which is the ATSC-1 PSIP standard. It Identifies the rating region described in a human-readable string as in, "Canada" or "US". It Indicates whether the rating dimension is defined on a "graduated scale" as well as the number of levels for content advisory in this dimension. There is also a human-readable string describing the rating value for this service (as in "TV-G (E/I)").

SYSTEMTIME

The SystemTime table provides the current time with offset in whole seconds between TAI (International Atomic Time) and UTC (Coordinated Universal Time). This unsigned integer shall indicate, when present, the upper 16 bits of the 48-bit count of PTP seconds. PTP Seconds refers to the seconds portion of the time distributed by the PTP timescale and as noted is referenced to 1 January 1970 TAI (International Atomic Time). This table also indicates if Daylight Saving Time is in effect. Also, it indicates the local day of the month and hour of the day on which the transition into or out of daylight-saving time is to occur.

AEAT – ADVANCED EMERGENCY ALERTING TABLE

The AEAT is an important and complex table contained within the LLS. The AEAT is composed of one or more AEA messages. An AEA message is formatted in the Advanced Emergency Alerting-Message Format (AEA-MF) structure. AEA-MF is a specific data format for forwarding a broad range of emergency-related information, including urgent bulletins, advisories, all-hazard warnings and other urgent information via NextGen TV. AEA-MF includes capabilities for the inclusion of multimedia content that could be forwarded from the alert originator (as in a public authority) or the broadcaster (such as ancillary content the broadcaster may want to forward to

accompany the emergency alert). The timing, versioning and language of the alerts is also signaled. The AEAT is an XML document. The AEAT can contain one or more AEA messages. The AEA message is composed of four basic elements. It can contain an optional Header (name, timing, language, location etc.), optional AEAtext (Text of message), optional LiveMedia (BSID and ServiceID associated with alert), and/or optional Media (URLs for optional media content) for alert multimedia resources in accordance with the table's schema, syntax and semantics.

ONSCREENMESSAGENOTIFICATION

This table contains broadcaster and service information for on-screen display of important text/visual information, including emergency-related, information that has been rendered by broadcasters for their video services. The table provides information to the receiver regarding whether to keep the screen clear for the service(s) during on-screen rendering of important text/visual information. There are rules available as well to keep all services or just some services with a clear screen. It can provide the BSID of the broadcast stream as well as the service(s) associated with the on-screen message. Also, the period the on-screen message will remain in effect is also assignable. Versioning identification of the message is also provided.

SMT – SIGNED MULTI -TABLE

This table contains a list of all the LLS tables (with the exception of the CDT), their version, length (in bytes), security signature (as provided for in ATSC A/360) and signature length.

CDT – CERTIFICATION DATA TABLE

This LLS Table carries X.509 Certificates and OCSP Responses that are used to verify signed signaling tables. When one or more signaling tables are signed, it is included as one of the LLS Tables. The Certification Data Table is a standalone table that contains its own signature (but not in the Signed Multi-Table - SMT). The signature of the CDT in not included as the content of the CDT Table is required to verify the signature of a SMT. The CDT defines the duration for which an OCSPResponse is considered valid from its created time. It also provides a list of certificates that are used to authenticate a broadcaster signature. This must include end-entity certificates authenticating the CurrentCert and the CMSSignedData signing certificate and any intermediate CA (Certificate Authority) certificates used to validate these certificates. The Root CA certificate is not included in the list. The CDT also includes the identity of the certificate currently used to sign signaling messages. It provides the earliest time at which the next certificate can be used. It provides the key Identifier for the certificate next used to sign signaling messages. Also included is a CMS (Cryptographic Message Syntax) Signed Data structure authenticating the data contained in this table. Additionally. status information for each of the certificates in provided.

SLS – SERVICE LAYER SIGNALING

For service delivery using ROUTE, the SLS for each service describes characteristics of the service, such as a list of its components and where to acquire them, the receiver capabilities required to present the service as well as the associated rules regarding access to file repair services by receivers. In ROUTE delivery of a DASH formatted streaming service, the SLS includes the User Service Bundle Description (USBD), the S-TSID and the DASH Media Presentation Description (MPD), and may include the HTML Entry pages Location Description (HELD), the Distribution Window Description (DWD) and the Regional Service Availability Table (RSAT).

In ROUTE delivery of data services (e.g., the ESG Service, the EAS or the DRM Data Service), app-based services or app-based feature in linear services, the SLS includes the USBD and the S-TSID and may include the MPD, HELD, DWD and the RSAT. The USBD and APD are based on the identically named (i.e. User Service Bundle Description and Associated Procedure Description) service description metadata fragments as defined in Multimedia Broadcast Multicast Services (MBMS) a 3GPP specification, with unique extensions that support ATSC 3.0 requirements.

For MMTP, the SLS for each MPU-formatted streaming service describes characteristics of the service. Included are a list of its components and where to acquire them, and the receiver capabilities required to present of the service. In the MMTP system, the SLS shall include the USBD fragment, the MMT Package (MP) table, and may include the HELD, and the DWD. For hybrid delivery, the MMTP-specific SLS shall include the MPD for broadband components.

The Service Layer Signaling focuses on basic attributes of the service itself, especially those attributes needed to acquire the service. Properties of the service and programming that are intended for viewers appear as Service Announcement, or ESG data. Having separate Service Signaling for each service permits a receiver to acquire the appropriate SLS for a service of interest without the need to parse the entire SLS carried within a NextGen TV broadcast stream. For optional broadband delivery of Service Signaling, the SLT will carry HTTP URLs where those Service Signaling files can be obtained.

For ROUTE/DASH services delivered over broadcast, the SLS is carried by ROUTE/UDP/IP in one of the LCT transport channels comprising a ROUTE session, at a suitable carousel rate to support fast channel join and switching. For MMTP streaming delivered over broadcast, the SLS is carried by MMTP Signaling Messages, at a suitable carousel rate to support fast channel join and switching. In broadband delivery, the SLS is carried over HTTP(S)/TCP/IP.

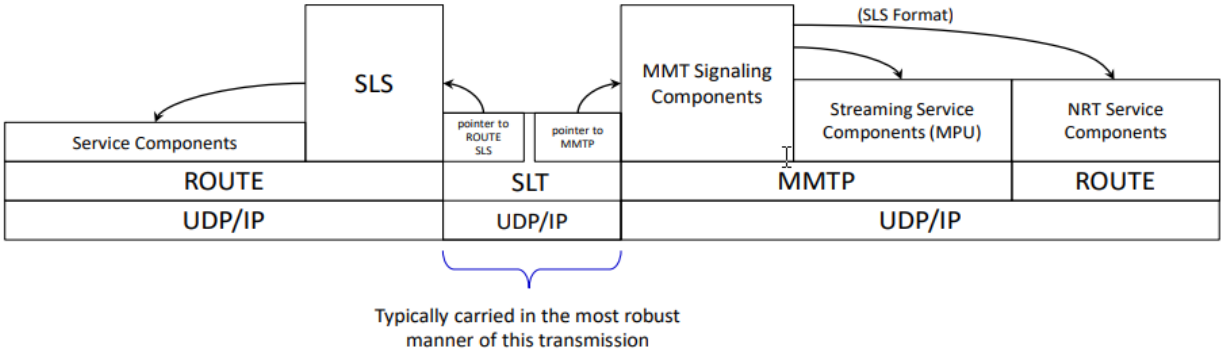

Bootstrapping the SLS and Service Components from the SLT

For ROUTE/DASH, the SLS describes characteristics of the service, such as a list of its components and where to acquire them, the receiver capabilities required to present the service, as well as the availability and associated rules regarding access to file repair services by receivers. For ROUTE/DASH system, the SLS includes these table/fragments:

- User Service Bundle Description (USBD),
- Service-based Transport Session Instance Description (S-TSID)
- Associated Procedure Description (APD),
- Media Presentation Description (MPD)
- HTML Entry pages Location Description (HELD)
- Distribution Window Description (DWD)
- Certification Data Table (CDT)

The USBD and APD are based on the identically named description fragments as defined in MBMS with extensions that support the NextGen TV requirements.

For the MMTP system, the SLS only includes the:

- User Service Bundle Description (USBD)
- MMT Package (MP)
- HTML Entry pages Location Description (HELD)
- Distribution Window Description (DWD)
- Certification Data Table (CDT)
- MP – MMT Package Table (MP)
- MA3 – MMT ATSC-3 Message (MA3)
- MPI – Media Presentation Information (MPI)

For hybrid delivery, the MMTP-specific SLS can further include the MPD for broadband components which are always deliver in a Route session.

USBD – USER SERVICE BUNDLE DESCRIPTION

The USBD describes basic properties of the service such as its identifier, status, name, associated language(s) and delivery method (broadcast or broadband). It includes the source and destination IP address and port for the associated ROUTE session. It also provides the associated LCT channels. It also provides information about the associated LCT channels that will carry either real-time content (DASH Media Segments and Initialization Segments) or non-real-time (locally cached) content, but not both

For Service delivery using MMTP, the USBD references the MMT's, MP Table that provides identification of Package ID and location information for assets belonging to the Service.

S-TSID – SERVICE-BASED TRANSPORT SESSION INSTANCE DESCRIPTION

The S-TSID is an SLS fragment that contains the transport session description information for the ROUTE sessions as well as their LCT channels in which the media content components of a NextGen TV service are located. With broadcast delivery of DASH formatted content, the ROUTE session can be considered as the multiplex of individual LCT channels that carry constituent media components of one or more DASH Media Presentations. Within each transport session (LCT channel), one or more objects are carried (typically with objects that are related), as in DASH segments associated to one stream. Along with each object, metadata properties are delivered such that the objects can be used in application services as with DASH Media Presentations, HTML-5 content, or any other object-consuming application. The S-TSID includes metadata for the delivery object or object flow carried in the LCT channels of the Service, as well as additional information on the payload formats and content components carried in those LCT channels. A child element of the S-TSID fragment is the srcflow (source flow) element which describes through Source Protocol all the details of that ROUTE session. The srcflow establishes one or more source flows within a ROUTE session, each of which delivers related objects as an object flow. Each object is recovered individually. Each ROUTE session shall be associated with an IP address/port combination found in the srcflow. Each ROUTE session shall constitute one or more LCT channels. LCT channels are a subset of a ROUTE session. For media delivery, an LCT channel would typically carry a media component, for example a DASH Representation. A 32-bit value used as the Transport Session Identifier (TSI) is also provided which represents the identifier for this LCT channel that will be unique in all ROUTE sessions described in this S-TSID

APD – ASSOCIATED PROCEDURE DESCRIPTION

The APD is an SLS fragment that contains information for use in conjunction with content inside the Extended File Delivery Table (EFDT) parameter of the S-TSID fragment to govern the optional use by the receiver in HTTP file repair. If connected to broadband a file repair procedure corresponds to an HTTP request/response transaction whereby a receiver, if unable to acquire the entire object or file delivered by ROUTE, can request and obtain the missing data from a broadband-based file repair server. A timing attribute is provided that represents the time interval in seconds that the receiver shall wait, after the end of transmission for the file of interest has occurred, before it can start the file repair procedure. A random period attribute is also provided as a time window within which the receiver shall calculate a uniformly distributed random value. This value represents an additional wait time, after the initial, fixed delay period by the receiver, before it submits the file repair request. The purpose of this random delay is to help provide a statistically uniform distribution of file repair request traffic arriving at the file repair server from multiple receivers.

MPD – MEDIA PRESENTATION DESCRIPTION

The MPD fragment contains a description of a Media Presentation based in the DASH-Industry Forum (DASH-IF) Interoperability Point for ATSC 3.0 Guidelines profile (DASH-IOP). The MPD describes various elements that make up a linear service of a given duration defined by the broadcaster (as in a single TV program, or the set of contiguous linear TV programs over a period). The presence of the Media Presentation Description (MPD) is generally only applicable with a service containing DASH-formatted content as in normal over-the-air broadcast-only delivery of ROUTE/DASH content. Said in another form, an MPD is not generally applicable in MMTP formatted services. However, in the context of a MMTP formatted session, an MPD will be required to describe any content delivered as NRT ROUTE delivered content, or via broadband, as in the case of a hybrid service, or to support service continuity as in handoff from broadcast to broadband due to broadcast signal degradation. As described in the DASH-IOP, contents of the MPD provide the resource identifiers for segments and the context for the identified resources within the Media Presentation as well as applicable (presentation) playout times based on wall clock time using any applicable offset. In actual operation one or more of the DASH representations conveyed in the MPD are carried over broadcast. The MPD may describe additional representations or portions of the service delivered over broadband as in alternative audio sources for example. Also, some elements are included in the MPD that provides information vital for the support of content security. The MPD is one of the most complex tables contained within the SLS and is critical for describing the proper presentation of a service. Describing all the options and semantics described within this description is not practical in this manual. It is

suggested if more information is required, the reader should refer to A/331 Signaling, Delivery, Synchronization, and Error Protection as well as the DASH-Industry Forum (DASH-IF) Interoperability Point for ATSC 3.0 Guidelines profile (DASH-IOP) https://dashif.org/docs/DASH-IF-IOP-for-ATSC3-0-v1.1.pdf

HELD – HTML ENTRY PAGES LOCATION DESCRIPTION

The HTML Entry pages Location Description (HELD) is an XML document containing a HELD root elements. These root elements contain one or more HTML Entry Page elements called APPContextID. These APPContextIDs are used to deliver to the receiver a broadcaster application or content elements can be launched after the viewer's receiver application receives signaling information from the launch URL. The initial URL forwards that launch URL to the receiver's User Agent (this "browser" capability is referred to as a User Agent in NextGen TV), which, in turn, loads the Application Entry Page. Once the main Application Entry Page has been loaded, it may begin requesting content from various local or external URLs. This may be done through JavaScript or standard HTML5 requests in a W3C-compliant fashion. The URL may be an Internet server or to the Receiver Web Server depending on how it is formatted in the service's application signaling.

The non-real-time file transmissions that contain the Broadcaster Application based in HTML, CSS, Javascript as well as alternatively ancillary digital data to be used in the application (such as media files) are provided in gzip compressed MIME Package in a ROUTE session. It is specifically carried within the broadcast service with appropriate addressing to be recognized and loaded by the receiver's user agent. These files will likely be transmitted repeatedly in a "carousel" manner

If a common broadcaster application framework is utilized and already loaded from a previous service, it would remain persistent and the receiver would only need to load the application files unique to that services' broadcaster application. This is possible because the AppContextID would remain the same from service to service for the framework but would be unique for the individual broadcaster application.

Beyond the AppContextID the HELD indicates which LCT channels contain Broadcaster Application files and resources. It also contains attributes that indicate the presence of an associated linear service as well as a broadcaster's request that the broadcaster application via the application's media player be allowed to render the applications content on the service. Additionally, the broadcaster can request the receiver through an entry in the HELD to eliminate versions of the application that have date and time stamps earlier than the designated date content identified by certain AppContextIds. Also, a specific date and time can be provided to run a specific application. A separate broadband or broadcast entry URL can be provided. The broadcaster can provide a "from" and "until" time and date for an application entry URL to be

valid. The broadcaster can also designate on which services the application can only be rendered. Lastly, there is an entry in the HELD as to which LCT channels of other broadcast-delivered content or resources may be available to the application.

DWD – DISTRIBUTION WINDOW DESCRIPTION

The Distribution Window Description provides a schedule of broadcast delivery of NRT files to the receiver targeted for use either directly by the receiver, or by broadcaster application. Broadcaster application content may pertain to app-based standard service, or constitute a standalone, app-based service. The DWD comprises one or more NRT content items or files that are scheduled to be delivered by ROUTE. The DWD may contain identifiers of applications to which these NRT files belong. It may include filter codes to enable selective download and caching of those files to support personalization, as well as specific files that will be transmitted during a given distribution time period window. Using the DWD information the receiver can then tune to the appropriate broadcast stream and LCT channel over which the NRT files are broadcast during the distribution window time period to download and store that content. These files can then be directed to the receiver, or a broadcaster application, and comprise any combination of an HTML5 entry page and/or other files such as JavaScript, CSS, XML and media files. The files may also serve other purposes, such as conveying content security message data. It might be desirable for a collection of NRT files to be broadcast during multiple distribution windows, to increase the likelihood of successful reception by a receiver having interest in those files, since the receiver may be unable to tune to the appropriate broadcast stream/LCT channel during any given distribution window instance. For example, a single-tuner receiver may be in active use and tuned to a different service during a given distribution window, but the receiver may not be in active use during a later instance of a distribution window that delivers the same content.

MP – MMT PACKAGE TABLE

This MMTP table carries an MP (MMT Package) table which contains the list of all the MMT service assets and their location information. The streaming content signaling component of the SLS for MPU components will correspond to the MP Table defined in 10.3.9 of ISO/IEC 23008-1 (MMTP standard). The MP table provides a list of MMT assets where each asset corresponds to a single service component and the description of the location information for this component. When an ATSC 3.0 Service contains more than one video asset, the value of the MP table shall indicate the default video as well as which are alternative video assets.

MA3 – MMT ATSC3 TABLE

With the use of MMTP, this table carries system metadata specific for ATSC 3.0 Services including Service Layer Signaling

MPI – MEDIA PRESENTATION INFORMATION

With the use of MMTP this message carries an MPI table which contains the whole document or a subset of a document of presentation information.

LMT – LINK MAPPING TABLE

The Link Mapping Table (LMT) describes how upper layer sessions are mapped. It does that by providing a list of multicasts carried within a PLP. The LMT also provides additional information needed for processing of the ALP packets carrying the multicasts in the link layer. The LMT only provides information on UDP/IPv4 multicasts. An LMT will be present in any PLP carrying an LLS, as indicated in the L1 Detail. Note that in the case where there are no multicasts referenced by LLS in a PLP, an LMT is still required to be present. Each instance of the LMT shall describe mappings between PLPs and IP addresses/ports for any IP address/port associated with any multicast referenced in the identified PLP carrying the LLS tables. However, the LMT does not describe mappings for the multicast that is associated with LLS, or specifically multicasts with destination address 224.0.23.60 and destination port 4397. Additionally, it is allowed for any LMT to describe mappings between PLPs and IP addresses/ports for any multicast, whether or not referenced in the PLP carrying the LLS tables.

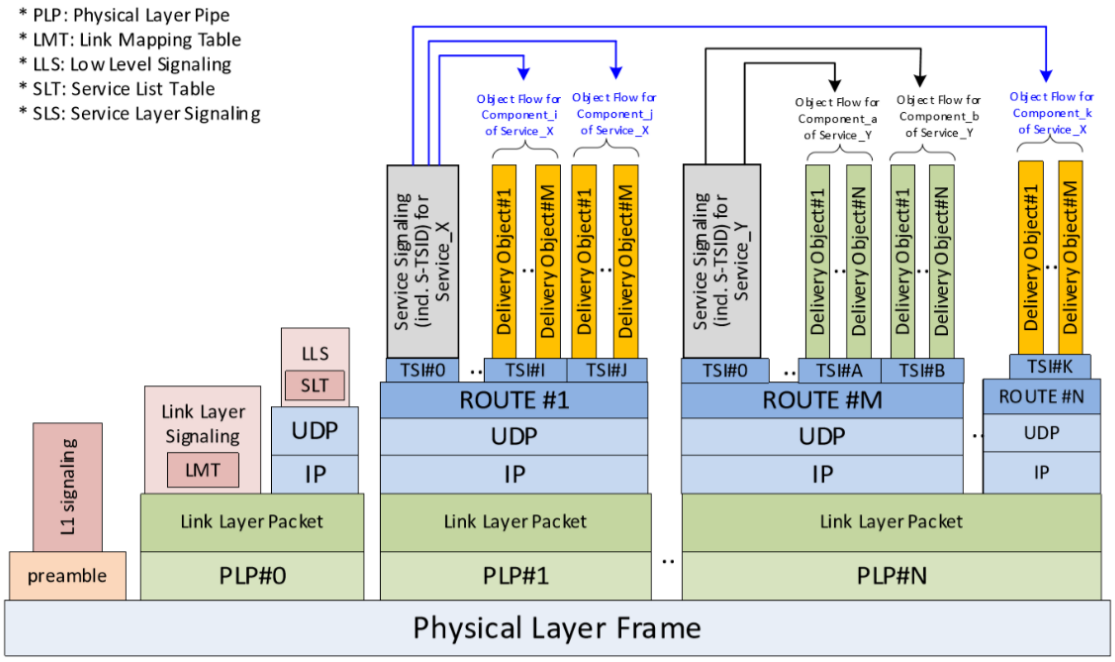

Example of ROUTE Hierarchical Signaling Architecture from A/331

Overall NextGen TV Encoding and Transmission Flow

ENCODING

The studio end of the transmission chain starts at the Application Layer by conditioning the incoming media streams to be encoded. Likely, the input streams be a version of the ATSC-1 transport stream, as SDI or IP representation. The video will be encoded in MPEG-2 or alternatively component SDI with embedded AC/3 audio. Depending on the manufacturer of encoder utilized, these streams may need to be converted to a form that is acceptable to the NextGen TV encoder's input.

These streams will then need re-encoding to HEVC (H.265) in the case of video and Dolby AC/4 in the case of audio. The video might require (depending on the broadcaster's preference) conversion to a scan type of progressive or decimal framing (instead of fractional). Also, the Dolby AC/3 audio will be fully decoded into its components before reencoding to Dolby AC/4. These capabilities are often already built into the decoding system.

The broadcaster can select Constant Bit Rate (CBR) or Variable Bit Rate (VBR) encoding, if the encoder supports both modes. The use of VBR is best when a common Physical Layer Pipe or PLP is being used in the broadcast scheme. In that way Statistical Multiplex techniques can be used to reduce overall need for valuable bandwidth.

Moving to the Presentation and Session Layers the output of both the video and audio encoders is a Packager. If DASH is selected (the other possibility is MMT) then the Packager is required. The encoded streams are created as segments to be multiplexed with all the other data and signaling in the NextGen TV telecast. Since these segments are broadcaster selected lengths of 50ms to 5 seconds, they must be stitched together in the proper order and time-of-play in decoding and display in the receiver. The Packager accomplishes that by a DASH Media Presentation Description (MPD) which is an XML table containing information about media segment content type, the related stream type as well as their relationships and information necessary by the DASH player to display them. Also, the time of broadcast is included in the metadata.

Closed captioning as required by FCC rule will be carried in the NextGen TV service within an MPD wrapper using the IMSC1 protocol. There are two closed caption protocols within IMSC1 that are acceptable to the standard, one is the captioning is carried in IMSC1 or alternatively, "tunneled" carriage of CTA 708 per SMPTE RP2052-11 (with additional provisions of ATSC A/343)

ENCAPSULATOR / SIGNALING AND ANNOUNCEMENT GENERATOR

Below is a diagram of the major functionality of the Encapsulator/Signaling and Announcement Generator. We have now moved to the Transport Layer. Although the diagram shown below represents the Route Transport case, this device in many implementations can also convert the signal to the MMT Transport case. The ROUTE case is shown below.

This device also creates much of the signaling required by the overall system. This signaling is the heart of the NextGen TV system.

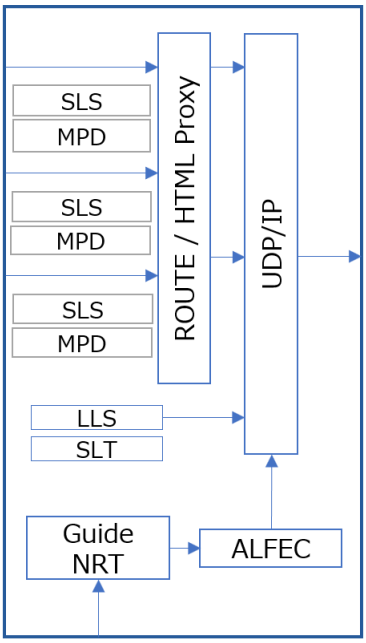

In this diagram you will see that the Packager supplied inputs (shown logically as separate) are present with their associated MPDs. Three are shown for reference, but there could be more or less dependent on what has been selected in terms of services. The streams at the input are multiplexed on a single IP stream.

Some of the specific items developed in the Encapsulator:

Low Level Signaling (LLS)

LLS is a multi-table with a pre-determined and published IP address/port. The purpose of the LLS is for rapid channel scanning and bootstrapping of services acquisition by the receiver. The LLS contains amongst other tables, Service List Table (SLT), Rating Region Table (RRT), System Time fragment, Advanced Emergency Alert Table (AEAT), and Onscreen Message Notification table.

SLT (contained within the LLS)

The Service List Table (SLT) within the Service Layer Signaling (SLS) explained below represent the information that is necessary to discover and acquire ATSC 3.0 services. The SLT enables the receiver to build a basic service list and bootstraps the discovery of the SLS for each ATSC 3.0 service by pointing to its IP location.

The SLT can enable very rapid acquisition of basic service information. The SLS in turn enables the receiver to discover and access ATSC 3.0 services and their content components.

The relationship between SLT and SLS for ROUTE Signaling (for ROUTE/DASH services) and the relationship between SLT and SLS for MMT Signaling (for services using MMTP/MPU streaming) is shown below.

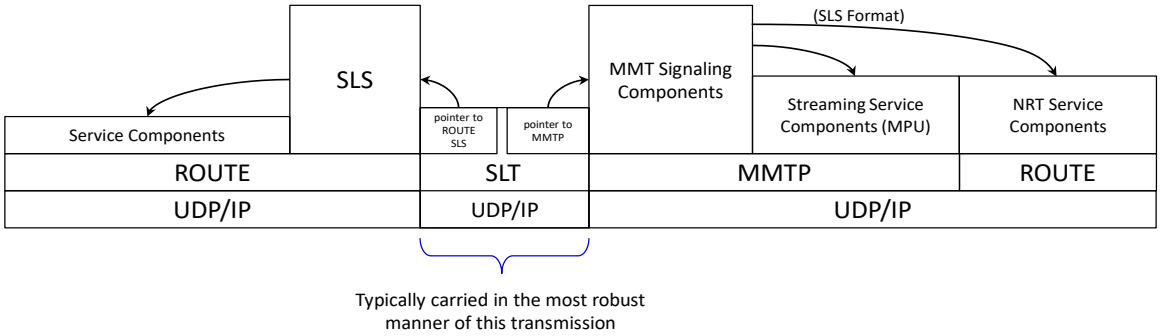

For ROUTE/DASH services delivered over broadcast, the SLS is carried by ROUTE/UDP/IP in one of the LCT transport channels comprising a ROUTE session, at a suitable carousel rate to support fast channel join and switching. For MMTP/MPU streaming delivered over broadcast, the SLS is carried by MMTP Signaling Messages, at a suitable carousel rate to support fast channel join and switching.

Creation of the SLS (Service Layer Signaling)

The SLS is a table which provides information for discovery and acquisition of ATSC 3.0 services and their content components and is pointed to (IP address) by the SLT contained in the LLS.

For service delivery using ROUTE, the SLS describes the characteristics of the service, such as a list of its components and where to acquire them, the receiver capabilities required to make a meaningful presentation of the service, and the availability and associated rules regarding access to file repair services by receivers. In ROUTE delivery of a DASH formatted streaming service, the SLS includes the User Service Bundle Description (USBD), the Transport Session Instance Description S-TSID and the DASH Media Presentation Description (MPD), and may include the HTML Entry pages Location Description (HELD), the Distribution Window Description (DWD) and

the Regional Service Availability Table (RSAT). In ROUTE delivery of data services (e.g., the ESG service, the EAS or the DRM Data service), App-based services or App-based enhancement in Linear services, the SLS shall include the USBD and the S-TSID and may include the MPD, the HELD, the DWD and the RSAT.

For MMTP, the SLS for each MPU-formatted streaming service describes characteristics of the service, such as a list of its components and where to acquire them, and the receiver capabilities required to make a meaningful presentation of the service. In the MMTP system, the SLS shall include the USBD fragment, the MMT Package (MP) table, and may include the HELD, and the DWD. For hybrid delivery, the MMTP-specific SLS shall include the MPD for broadband components

Service Signaling focuses on basic attributes of the service itself, especially those attributes needed to acquire the service. Properties of the service and programming that are intended for viewers appear as Service Announcement, or ESG data.

DASH/ ROUTE and MMT Transport Protocol

Two methods of broadcast service delivery are specified in the ATSC-3 standard. The method depicted on the left side of the figure below is based on MPEG Media Transport (MMT), ISO/IEC 23008-1 and uses MMT protocol (MMTP) to deliver Media Processing Units (MPU). The method shown in the center is based on the DASH-IF (DASH Industry Forum) profile, which is based on MPEG DASH. It uses Real-time Object delivery over Unidirectional Transport (ROUTE) protocol to deliver DASH Segments.

ROUTE must be used with Non-Real Time (file based) content not intended for rendering in real time as it is received, for example,

- a downloaded application or app enhancement
- file containing Guide or EA information,
- DRM system client is also delivered by ROUTE.

Signaling may be delivered over MMTP and/or ROUTE, while Bootstrap Signaling information is provided by the means of the Service List Table (SLT).

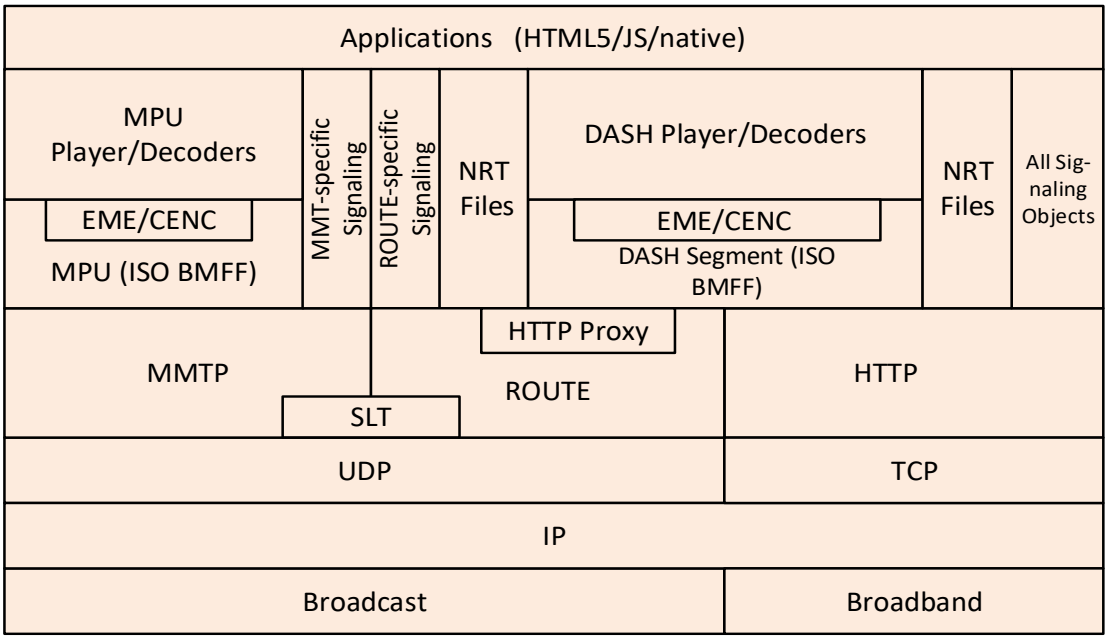

To support hybrid service delivery in which one or more program elements are delivered via the broadband path, the DAS-IF profile over HTTP/TCP/IP is used on the broadband side. Media files in the DASH-IF profile based on the ISO Base Media File Format (ISO BMFF) are used as the delivery, media encapsulation and synchronization format for both broadcast and broadband delivery.

Both transport protocols provide support for system features including:

- Real-time streaming of broadcast media.
- Efficient and robust delivery of file-based objects.
- Support for fast Service acquisition by receivers (fast channel change).
- Support for hybrid (broadcast/broadband) Services.
- Highly efficient Forward Error Correction (FEC)
- Compatibility within the broadcast infrastructure with formats and delivery methods developed for (and in common use within) the Internet.
- Support for DRM, content encryption, and security.
- Support for Service definitions in which all components of the Service are delivered via the broadband path (note that acquisition of such Services still requires access to the signaling delivered in the broadcast).
- Signaling to support state-of-the-art audio and video codecs.
- Non-real-time delivery of media content.

- Non-multiplexed delivery of Service components (e.g., video and audio in separate streams or PLPs for example).
- Support for adaptive streaming on broadband-delivered streaming content.
- Appropriate linkage to application-layer features such as ESG and Interactive Content

The definition and purpose of the ROUTE protocol is the reliable transport of delivery objects and associated metadata using LCT (Layered Coding Transport) packets and provide the following capabilities:

- Format of the LCT packets that carry the delivery objects.
- Reliable transport of the delivery object using a repair protocol based on FEC.
- Definition and carriage of object metadata along with the delivery objects to enable the interface between the delivery object cache and the application.
- The ROUTE session, LCT channel and delivery object description provided as service signaling to enable the reception of objects.
- The definition (formats, semantics) of the objects conveyed as a content manifest (MPD) to be delivered along with the objects to optimize the performance for specific applications, e.g., real-time delivery. The objects and manifest are made available to the application through a Delivery Object Cache.

Many more details as to how ROUTE/DASH works can be found in ATSC A/331 Signaling, Delivery, Synchronization and Error Protection.

MMT Transport Protocol

MMTP is an alternative transport protocol designed to deliver MPUs as specified in ISO/IEC 23008-1. MMTP provides several useful features for real-time streaming delivery of MPUs via a unidirectional delivery network such as:

- The media-aware packetization of MPUs
- The multiplexing of various media components into a single MMTP session
- The removal of jitter introduced by the delivery network at the receiver within the constraints set by the sender
- The management of the buffer fullness of the receiver by the server to avoid any buffer underflow or overflow and the fragmentation/aggregation of payload data
- The detection of missing packets during delivery

For MMTP/MPU services, streaming contents are encapsulated into MPUs and delivered by MMTP. An MPU is an ISO BMFF formatted file enables efficient streaming delivery of MPUs. For example, an MPU is self-contained, i.e. initialization information and metadata required to fully decode the

media data in each MPU is carried in the MPU. In addition, each MPU contains a globally unique ID of media components called the Asset ID and a sequence number to enable unique identification of each MPU regardless of the delivery mechanism.

Mapping Between an ATSC 3.0 Service and MMT Packages

Each content component is considered as an MMT Asset having a unique identifier. Each MMT Asset is a collection of one or more MPUs with the same Asset ID. MPUs associated with the same Asset ID do not overlap in presentation time. An MMT Package is a collection of one or more Assets, and an ATSC 3.0 Service delivered by MMTP shall be composed of one or more MMT Packages, where MMT Packages do not overlap in presentation time. Multiple Assets may be delivered over a single MMTP session. Each Asset shall be associated with a packet_id which is unique within the scope of the MMTP session. This enables efficient filtering of MMTP packets carrying a specific Asset. The mapping information between MMT Packages and MMTP sessions shall be delivered to the receiver by MPT (MMT Package Table) messages.

As mentioned earlier, ROUTE must be used with content not intended for rendering in real time as it is received.

Details on the implementation of MMTP/MPU can be found in ISO/IEC TR 23008-13 as well as found in ATSC A/331 Signaling, Delivery, Synchronization and Error Protection.

Addition of AL-FEC (Application Layer Forward Error Correction) for NRT streams

Optionally, source data may include repair data that is generated from the source data by applying an AL-FEC algorithm. The repair data is only useful to application-layer forward error correction systems in correction-capable receivers.

The availability of AL-FEC in ROUTE is crucial to several important applications, for example:

- Large NRT file delivery
- DVR (trick mode) applications
- Enhanced robustness for collection of smaller objects; e.g., a web page

The application of AL-FEC is of marginal benefit for linear streaming service content that have longer physical layer durations.

Another application of AL-FEC is the broadcast delivery of app-based services, i.e., file-based delivery of application specific content objects (downloaded songs, video clips, interactivity related media assets, etc.), and service metadata such as the ESG. For NRT content delivery over ROUTE, (all NRT data requires ROUTE transport) the source flow, when delivering file content, should use the File Mode as defined by ROUTE.

LCT (Layer Coded Transport) required for service identification

Each ROUTE session comprises one or more LCT channels which carry as a whole, or in part, the content components that make up the ATSC 3.0 service. In streaming services delivery, an LCT channel may carry an individual component of a user service such as an audio, video or closed caption stream. Streaming media is formatted as DASH Segments.

Properties common to the LCT channels, and certain properties unique to individual LCT channels, are given in a ROUTE signaling structure called a Service-based Transport Session Instance Description (S-TSID), which is part of the Service Layer Signaling. Each LCT channel is carried over a single Physical Layer Pipe or PLP. Each PLP may contain one or more LCT channels. Different LCT channels of a ROUTE session may or may not be contained in different Physical Layer Pipes. The properties described in the S-TSID include the TSI value for each LCT channel, descriptors for the delivery objects/files, and Application Layer FEC parameters

The S-TSID (Service-based Transport Session Instance Description) fragment provides transport session descriptions for the LCT channel(s) of the one or more ROUTE sessions in which the media content components of an ATSC 3.0 service are delivered, and descriptions of the delivery objects carried in those LCT channels.

For the delivery of App-Based features or system metadata such as service and application signaling information, an LCT channel carries file-based content items. These content files may consist of applications or continuous (time-based) or discrete (non-time-based) media components of an App-Based feature, or metadata such as SLS or ESG fragments.

Each service is identified by two forms of service identifier: a compact form that is used in the SLT and is unique only within the broadcast area, and a globally unique form that is used in the ESG. A ROUTE session is identified by a source IP address, destination IP address and destination port number. An LCT channel (associated with the service component(s) it carries) is identified by a Transport Session Identifier (TSI) which is unique within the scope of the parent ROUTE session, and, additionally, unique within the scope of all ROUTE sessions defined for a given Service in the S-TSID.

An LCT channel may not be used to carry both media components of a linear Service and application files associated with that Service.

Assignment of HTML IP addressing

Moving now to the Network Layer, the Encapsulator provides appropriate IP and port addressing to be used by the HTML Proxy for the DASH player in the receiver with assignment for the transport as signaling objects and services. For purposes of simple explanation, the DASH player resides in the receiver inside of a special HTML browser in the receiver.

BROADCAST GATEWAY/SCHEDULER

An ATSC3.0 Broadcast Gateway/Scheduler encapsulate ROUTE, MMT, ALP (ATSC Link Layer Protocol) or IP streams into an ATSC-3 multiplex while inserting synchronization data for optional Single Frequency Network (SFN) broadcasting, allocates data into the different Sub-Frame and Physical Layer Pipes (PLP) and generates Studio to Transmitter Link Transport Protocol output packets. The block diagrams shown in this explanation assume a multiplexed IP input stream with LCT streams.

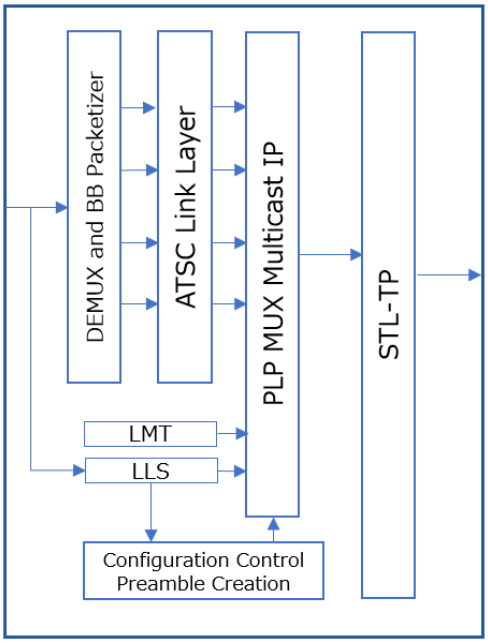

Here is a simple summary of what a Gateway Scheduler does

- Creates LCT based IP streams (ROUTE, MMTP…) into ATSC Link Layer Protocol (ALP as the Data Link Layer)
- ATSC 3.0 Baseband (Physical Layer) Frame allocation
- LMT (Link Mapping Table) generation as well as LLS table insertion
- Single and Multiple Sub-frame management and assignment
- Single and Multiple PLP management and assignment
- Generation of STL output packets over Multicast IP (STLTP)
- Control (via Modulator/Exciter) of ATSC 3.0 transmission parameters
- ATSC 3.0 SFN Adaptation
- Support of LDM and MISO modes

In our example the input stream is demultiplexed and assigned using the contents of the LCTs to individual logical channels which will ultimately become Physical Layer Pipes by means of a Link Layer. We now are at the Data Link Layer of the OSI Model.

This is accomplished via the ATSC Link Layer Protocol (ALP). This part of the ATSC 3.0 protocol stack is fundamentally link layer signaling consisting of a header, links, and payloads. The link layer protocol isolates various transport types from the ultimate Physical (Transmission) Layer. Leveraging ALP, broadcasters can perform IP and TS packet encapsulation, segmentation and reassembly, concatenation, and header compression within this layer. Included in the ALP layer is a Link Mapping Table (LMT). The LMT provides a list of multicasts carried in a PLP. The LMT also provides additional information for processing the ALP packets carrying the multicasts in the link layer. The ROHC-U Description Table (RDT) is a header compression description for decompression purposes.

Following ALP is the UDP and IP multicast layers. It's important to note that all of the streams that come through ATSC 3.0 are multicast and are based on a range of IP destination addresses (e.g., 224.0.0.0 to 239.255.255.255). ATSC 3.0 defines a specific IP address and port number for elementary streams instead of using PIDs, as was the case with ATSC 1.0.

The Low Level Signaling (LLS) layer of ATSC 3.0 is now also inserted into this multicast stream so it can easily be found by the receiver via a dedicated multicast stream (224.0.23.60/4937).

EXCITER/MODULATOR

STLTP, Physical Layer Pipe, Exciter Configuration and Preamble Demux

We are now dealing with the creation of the Physical Layer of the OSI Model. After the STLTP signal is recovered from the STL is sent to the Exciter where it is removed from its STLTP transport and the separate PLPs, Exciter and Preamble Configurations are demultiplexed.

BICM (Bit Interleaved Coded Modulation)

The PLP data is sent to the BICM (Bit Interleaved Coded Modulation) section of the exciter/modulator as shown below. This stage provides mapping as well as error checking and correction that provide the high spectral efficiency close to (Shannon zero error) channel capacity limits. The BICM includes a special form of Forward Error Correction (FEC) including convolution (continuous) inner code and low-density parity-check (LDPC) outer code. A FEC block is formed by concatenating a payload packet with an outer and an inner correction code. It also includes a bit interleaver that increases the ability of error protection coding to correct for burst errors. The BICM also contains a Non-Uniform Constellation (NUC) mapper that is used with non-uniform QAM. It is not used with QPSK modulation, which is by nature uniform. Non-Uniform Constellation

mapping is a method by which a normally symmetrically shaped QAM constellation is modified such that the ultimate spectrum-energy distribution more closely matches that of Gaussian noise. This improves a QAM signal's noise immunity and significantly minimizes symbol error rate (SER). In the BICM the FEC code length and code rates are all user configurable to help the broadcaster match the signal to the transmission conditions anticipated for a particular service. They are noted in the familiar Input rate/symbol rate notation.

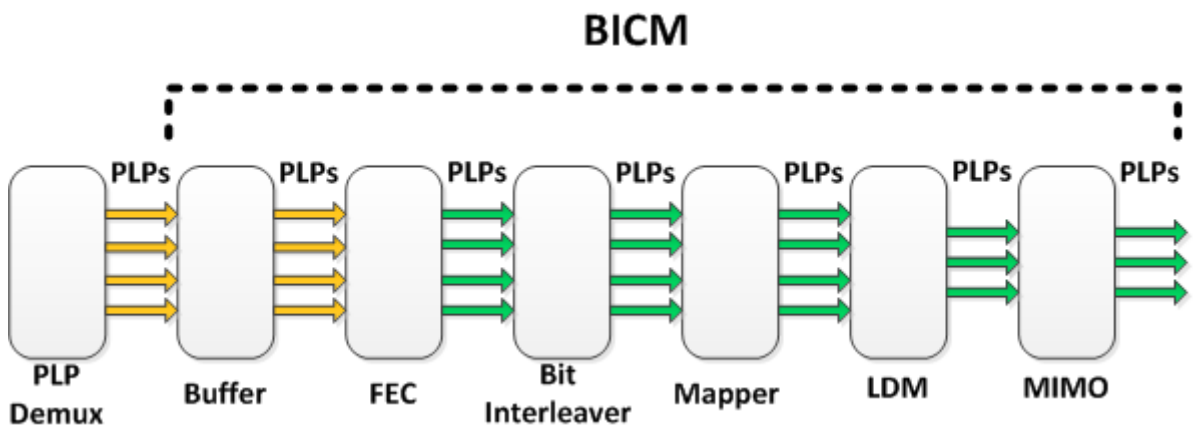

The blocks of data subsequently pass to an optional Layered Division Multiplexing and MIMO process. LDM takes two independent streams corresponding to two separate PLP's and modulates them separately on different constellations, and then adds them at different power levels in a way that they can be recovered independently in the receiver. MIMO is an optional mode of transmission that would require additional transmission equipment and receivers that can receive MIMO based transmissions.

Framer/Interleaver

The Framer/Interleaver section is shown in the figure below. The optional LDM/MIMO block's output passes to a time Interleaver to spread the payload out over time to mitigate time-based channel impairments. For a single PLP configuration, the payload can be spread over a certain period. For multiple PLPs a hybrid convolutional/block type interleaving is used. There is a finite memory/time limit for all types of interleaving. This also constrains the length of time for interleaving. However, studies have shown that receivers with longer period channel impairments

do not benefit from long time interleavers, but rather benefit through antenna diversity, i.e. there is likely alternate signal energy from a different propagation angle.

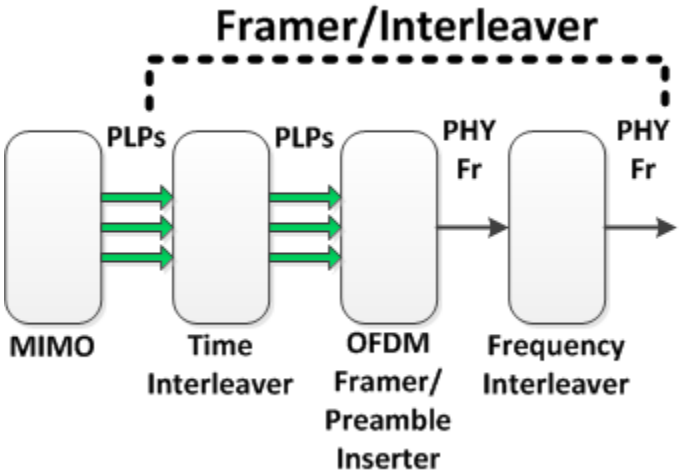

The time interleaved payloads then pass to the OFDM framer, which takes the constellation mapped cells and spreads them out across a matrix of location options of an OFDM frame. Those options include Time, Frequency and Time /Frequency (TDM, FDM, and TFDM) types of PLP cell multiplexing. The data cells of PLP's are packed into sub-frames and frames as dictated by the Gateway/Scheduler configuration. Every physical frame begins with a Preamble that carries signaling needed for the receiver to find and to access the PLP data. A frame may be composed of one or more sub-frames. Each sub-frame may contain one or more PLP data cells having their starting locations and sizes described by the corresponding Preamble signaling allocation parameters. PLP cells within one sub-frame can be also multiplexed in TDM, FDM and TFDM. The framer produces sub-frames of multiplexed PLP data cells that are mapped into allocated data cells of OFDM symbols. Theses mappings depend on the selected OFDM FFT size of 8192 (8K) 16384 (16K) or 32768 (32K), and the number of useful carriers, designated as NoC.

The symbol form of this data now passes to a frequency interleaver which interleaves each symbol across the channel bandwidth as shown in the figure below. Frequency interleaving is effective for mitigating channel-based narrowband noise. Continual and scattered pilots are also added to aid receiver channel synchronization and channel estimation (as a reference for the receiver to compensate for multipath and its resulting channel frequency response). There are 12 scattered pilot patterns for the broadcaster to choose from, which further enhances channel estimation in a wide range of channel reception conditions. In short, pilots make it possible for the receiver to

lock to the modulated signal that has be interfered with by channel conditions. Pilots (also called tones) have locations that depend on FFT size and the number of carriers selected.

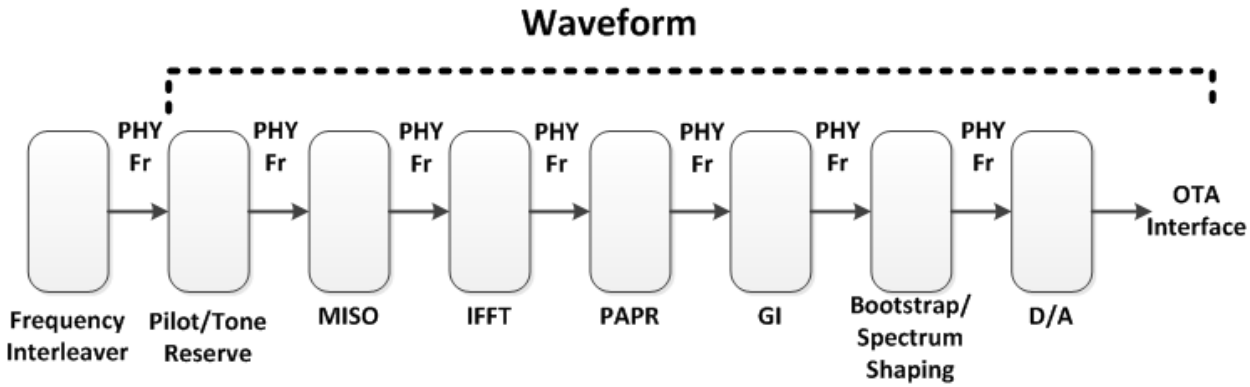

After pilot addition, optional MISO filtering is applied, if transmitter diversity for more robust broadcast reception is required.

After this option, the inverse FFT is applied to the payload. This takes the frames from the frequency domain to the time domain and provides the time-domain signal representing the thousands of carriers, for modulation onto the RF carrier frequency.

One of the concerns with the use of ODFM is the high peak to average power ratio requirement it can create. This means that statistically significant peaks in power require the inclusion of inordinately large headroom in transmitters to prevent distortion in the transmitted signal. To reduce the amount of headroom required, two optional and complementary correction techniques may be applied in the Peak to Average Power Ratio (PAPR) block and may be used separately or combined. The two are Tone Reservation (TR) and Active Constellation Extensions (ACE). With the use of TR, a set of dedicated COFDM sub-carriers are modulated and utilized to cancel peaks in the time domain. For ACE techniques, boundary constellation points (presumably creating more power) are extended into a predefined sector to reduce peaks in the time domain.

With this scrambled, interleaved, payload protected, multiplexed and framed data, a Guard Interval (GI) is introduced between symbols to protect against channel reflections or echoes or other impairments within the chosen GI duration. These Guard Intervals are also vital in the implementation of Single Frequency Networks or SFNs which may appear to receivers as echoes or time diverse reflections. There are twelve selectable intervals that range from 28 µsec to over 700 µsec in length. Occupying this Guard Interval is a copy of the last part of the OFDM symbol,

called the Cyclic Prefix. The cyclic prefix allows the receiver to avoid inter-symbol interference in each of the thousands of subcarriers, if the echoes are within the GI.

After the Guard Interval with Cyclic Prefix is established, the Bootstrap signal is inserted, just before the start of each Preamble of a physical frame. The Bootstrap is a time domain signal containing a short duration data message that is used to provide the receiver a universal entry point with just enough information so that it can find and decode the full RF channel, The bootstrap employs a fixed unique 2K FFT (not adjustable) signal in a very robust configuration (e.g. sampling rate, signal bandwidth, subcarrier spacing, time domain structure and cyclic prefix) known to all receiving devices. The Bootstrap has a narrower, fixed (4.5 MHz) bandwidth signal than the rest of the OFDM frames to improve available transmission power and to reduce interference from adjacent channels. The Bootstrap consists of a number of symbols created by its own and unique constellation mapper and IFFT, beginning with a synchronization symbol positioned at the start of each frame period to enable service discovery, coarse synchronization, frequency offset estimation, and initial channel estimation. The remainder of the bootstrap contains sufficient control signaling to permit the discovery and decoding of the remainder of the Preamble and physical frame. It can optionally, carry a very short message to alert the receiver of an emergency in the receiver's area. The actual emergency message is carried elsewhere in the data payload. In this way a very low level of receiver functionality (and thus potential power usage) can decode the presence of an alert even if the receiver is in a standby mode, receiving only the bootstrap signal and not decoding the balance of the signal.

The time domain digital signal then passes through a series of (digital) filters to provide spectral shaping and is finally converted from the digital to the analog domain where is signal level is increased and sent to the power amplifiers found in a transmitter.

Exciter /Modulator Parameter Descriptions

The following descriptions explain just some of the various parameter settings used in setting up an ATSC-3 exciter/modulator.

BANDWIDTH

The allocated size of the broadcast channel, given in megahertz.

FFT SIZE

The number of discrete points used in the calculation of the IFFT used to synthesize the OFDM waveform. Also, the number of discrete points used in the calculation of the FFT to demodulate the received OFDM waveform.

GUARD INTERVAL

The time interval inserted between OFDM symbols (containing the cyclic prefix), used to minimize Inter-Symbol interference; given in microseconds.

SCATTERED PILOT FREQUENCY SPACING

The frequency separation of the Scattered Pilots used for channel estimation, given as Normal or Dense. The least dense patterns, i.e. those with the greatest distance between pilots, in both time (Dy) and frequency (Dx), provide the greatest payload as fewer carriers are used for pilots, and subsequently more are available to carry data. The Physical Layer standard describes when and with what phase positions the scattered pilots are transmitted.

SCATTERED PILOT TIME SPACING

The time separation of the Scattered Pilots used for channel estimation, given as the number of symbols forming one scattered pilot sequence.

CONSTELLATION SIZE (QAM)

The number of points in the two-dimensional scatter diagram of the QAM signal.

LDPC LENGTH

The size of the Low-density Parity-check FEC inner code; given in bits. There are tradeoffs in the selection between robustness and latency.

LDPC CODE RATE

The Low-density Parity-check Code Rate, defining the proportion of the stream that is useful data; given as an integer factor over 15.

REFERENCE

BCH

The Bose/Ray-Chaudhuri/Hocquenghem FEC outer code; options are ON or OFF.

FRAME LENGTH

The overall frame length for a time-aligned frame, given in milliseconds.

LDM INJECTION LEVEL

The lower-layer injection level, given in dB compared to the upper-layer.

NUMBER OF PLPS

The number of Physical Layer Pipes carried in the Physical Layer. 64 are allowed but receivers need only support 4 at once.

REFERENCE

Definitions

This section contains areas of interest that are important to be considered in understanding acronyms and terminology used in ATSC-3 NextGen TV.

This section is still in process

2K - a scanning system that is 1080 lines by 1920 horizontal pixels.

3D (3 Dimensional) - in television, accomplished by encoding additional data such that the viewer can experience the perception of depth in the image. Images meant for viewing with one eye are encoded separately than the other. Images closer to the camera will be more diverged than imagery that is further away. This creates for the viewer an appearance of depth, if each image can be directed to the appropriate eye (as in using special glasses).

4:2:2 - because the human visual system is less sensitive to the color of objects than their luminance component, chroma subsampling can be utilized while encoding video. In this specific case the sampling ratio of Y'CbCr is 4 to 2 to 2.

4:2:0 - in this scheme the chroma subsampling in each horizontal line is at half the luma rate, while Cb and Cr channels are only sampled on alternative lines.

4:4:4 - in this case the three Y'CbCr components have the same sample rate, thus there is no chroma subsampling required.

4K - a screen scan size that is 2160 lines by 3840 horizontal pixels (4 times the area of 1080 X 1920)

5.1 Channels - in ATSC-1, AC-3 audio describes 6 channels made up of Left, Center, Right, Left Rear, Right Rear and LFE (subwoofer).

7.1 Channels - in ATSC 3.0, the NextGen TV Audio system will contain 7.1 channels which will include those mentioned in 5.1, as well as splitting the surround and rear channel information into four distinct channels, in which sound effects are directed to left and right surround channels, plus two rear surround channels.

8-VSB (8-Vestigial Side-Band) - the single-carrier waveform defined by the ATSC-1 standard and adopted by the FCC use as a digital television transmission standard in 1995.

A/53 - the primary ATSC document governing the ATSC-1 standard.

A/153 - the primary ATSC document governing the ATSC-M/H (mobile/handheld) standard.

AC-3 (Advanced Coding-3) - the descriptor for the audio codec developed by Dolby Labs and used in ATSC-1.

AC-4 (Advanced Coding-4) - the audio compression technology developed by Dolby Labs and used by convention in North America in ATSC-3.

REFERENCE

ACE (Active Constellation Extension) - a methodology for reducing the negative effects of peak to average power ratio in COFDM transmitters, by use of manipulating the constellation to reduce the transmission Peak to Average Power Ratio.

AEA (Advanced Emergency Alerting) - a series of features that will be supported in ATSC that will bring vital emergency information to the viewer in the form of rich media, as well as other content that will be of vital interest to the viewer.

AFD (Active Field Descriptor) - a standard set of codes that can be sent in a video stream or in the baseband video signal that carries information about the desired display aspect ratio, as well as the screen rendering characteristics required. It is described in the SMPTE -2016-1 standard.

AGWN (Additive Gaussian White Noise) - a basic noise model that adds to the basic system noise model the effect of many random processes that occur in nature.

ALP (ATSC Link-layer Protocol) - the data encapsulation/compression abstraction layer used to provide baseband framing functions and signal input formatting.

ATSC - Advanced Television Standards Committee, an international industry-supported Standards Developing Organization (SDO) that develops and documents television transmission standards.

ATSC-1 - the first digital television transmission standard developed in 1995 that is used currently as the television standard in the U.S. as well as other countries.

ATSC-3 - the transmission standard being currently developed, that provides increased services with robust signal quality through the use of increased bandwidth efficiency and improved error detection and correction.

AVC (Advanced Video Coding) - MPEG4 Main 10 profile or H.264 video codec. It provides approximately twice the data bandwidth efficiency of MPEG-2 video encoding.

Base Layer - also referred to as Layer 1 of a two-layer LDM (Layered Division Multiplexing) system.

BBP (Base Band Packet) - a packet structure that will allow ALP packets to be encapsulated in such a way as to efficiently fit into the associated PLP structure. These packets contain padding or concatenation data as required**.**

BCH (Bose, Chaudhuri, Hocquenghem) - one of two options for linear error coding used in the BICM processing block for outer code correction (CRC is the other). For ATSC 3.0, a 12-bit correctable BCH provides for both error detection and correction capabilities.

BICM (Bit-Interleaved Coded Modulation) - a flexible modulation/coding scheme in which you may choose a modulation constellation independently of the coding rate. It contains the Forward Error Correction, Bit Interleaving and Mapping (as in constellation) functions.

Bit Interleaver - rearranges data without loss to provide immunity to time-based noise bursts that interfere with the received signal.

BMFF (Base Media File Format) - (ISO/IEC 14496-12 - MPEG-4 Part 12), a general structure for time-based multimedia files such as video and audio. It is designed as a flexible, extensible format that facilitates interchange, management, editing and presentation of the media, and is designed to be independent of any particular network protocol.

Bootstrap - also known as the System Discovery and Signaling (A/321) and is the universal receiver discovery signal into the ATSC-3 digital transmission signal. It precedes the preamble and is part of the overall ATSC 3.0 frame structure. In addition to the emergency alert wakeup signal, it includes ATSC 3.0 version number, and signals the FFT size, guard interval, and scattered pilot pattern of the preamble symbols.

Broadcast Gateway - a device that resides at the studio or NOC that provides IP delivery, as well as signaling, ALP processing, SFN processing, and scheduler functions.

Broadcast Manager - in a fully automated ATSC-3 transmission system, provides coordinated media preparation and delivery administration across content supply with over-the-air as well as broadband delivery.

Captioning (Closed) - data that is contained with the ATSC-3 signal that will provide a transcript version of what is being said on the screen. At the option of the viewer, the text may be displayed contemporaneously on the screen.

CAT 5 - a wiring standard described in TIA/EIA-568-B.1-2001 T568A or B with 100 Mhz in bandwidth, which translates into 1000BaseT.

CAT 6 - a wiring standard described in TIA/EIA-568-B.1-2001 T568A or B with 250 Mhz in bandwidth, which translates into 10GBaseT.

CFF-TT (Common File Format Timed Text) - a closed captioning data delivery standard based on W3C TTML with SMPTE-TT extensions.

C/N (Carrier to Noise) - a ratio, usually expressed in decibels (dB), of the carrier power relative to the noise power. This term is used to distinguish the C/N of the RF signal from the S/N of received data.

Code Rate - in a digital system with Forward Error Correction, this is the ratio of useful data to total data with redundancies (correction) included. For ATSC 3.0 there are 12 different code rates available (2/15 through 13/15)

COFDM (Coded Orthogonal Frequency Division Multiplex) – a digital multi-carrier modulation method that uses a large number of closely spaced carriers, 90 degrees apart, that carry complex data that has been converted from the frequency to the time domain.

Constellation - a two-dimensional visualization of a transmitted symbol of a complex digital number via the modulation of a sine and cosine signal.

Core Layer - the basic layer of an LDM transmission system.

CP (Circular Polarization) - a circularly polarized transmitted wave from an antenna which occurs when its vertical and horizontal components are equal. The relative phase of each component determines whether the result is right circular or left circular.

CRC (Cyclic Redundancy Check) - one of three options for the error coding used in the BICM processing block for outer code correction (BCH and none are the other two options). For ATSC 3.0, a 32-bit CRC provides only error detection with no error correction capabilities.

CTI (Convolutional Time Interleaver) - a means by which the data is pseudo-randomized to reduce the negative effects of random noise bursts in a transmission system. It is enabled when there is only a single PLP or when LDM is used with a single core-layer PLP.

DASH (Dynamic Adaptive Streaming over Hyper-Text Transfer Protocol) - in ATSC 3.0, an abstraction layer described in ISO/IEC 23009-1. It is a standard method to stream packets of (typically) video and audio over IP. The DASH format is used for both broadband and broadcast delivery. HTTP is used as the broadband delivery protocol, and ROUTE is used as its broadcast delivery protocol.

DECE (Digital Entertainment Content Ecosystem or Ultraviolet) - a consortium of content producers, consumer electronics manufacturers and Digital Rights Management (DRM) vendors that have created a series of standards for delivery of content.

Doppler –the often-detrimental phase and frequency shift that results from the relative motion of the receiver and transmitter. In a phase dependent modulation system such as COFDM it must be considered in the system design and error correction required. It is named for the scientist Christian Doppler who first discovered this phenomenon**.**

DP0, DP1, DP2 (Data Pipe 0, 1, 2) - three simultaneous time-division-multiplexed signals (or "data pipes") with an OFDM waveform. This terminology was used in the LG-Zenith-GatesAir complete system proposal for ATSC 3.0. This system was referred to as "Futurecast" by its proponents. This terminology is synonymous with the "PLP" term used in both DVB-T2 and ATSC 3.0. "PLP" means "Physical Layer Pipe."

DRM (Digital Rights Management) - a system by which digital media content is protected from unauthorized view or use (as in unauthorized copying).

DS3 (Digital Signal 3) - a commercially available digital data communications line. The data rate for a DS3 is 44.736 Mbit/s (45 Mb). A DS3 is alternatively known as a T3 Line.

DTV - Digital Television.

DTT (Digital Terrestrial Television) - television transmission system using digital transmission for broadcast, that makes efficient use of spectrum with the provision of more capacity than analog.

DVB-T2 (Digital Video Broadcasting, Second Generation Terrestrial) **-** the extension of the television standard DVB-T devised for the broadcast transmission of digital terrestrial television. DVB has been standardized by ETSI (*European Telecommunications Standards Institute)***.**

EAS (Emergency Alert System) - a national public warning system that requires broadcasters, cable television systems, wireless cable systems, satellite digital audio radio service (SDARS) providers, as well as direct broadcast satellite (DBS) operators to provide the capability to the President to address the American public during a national emergency. The system also may be used by state and local authorities to deliver important emergency information, such as AMBER alerts and severe weather information targeted to specific areas**.**

EBU (European Broadcast Union) - an alliance of public service media. It has 73 Members in 56 countries in Europe, and an additional 34 Associates in Asia, Africa and the Americas, broadcasting in more than 120 languages.

ECC (Error Correction Coding) – coding that uses an algorithm for expressing a sequence of bits such that any errors which are introduced in the system can be detected and corrected (within certain limitations) based on the remaining (redundant) bits.

EMDF (Extensible Metadata Delivery Format) – a protocol which provides a structured and extensible container for metadata to be carried in AC-4 bit streams.

Enhancement Layer - Layer 2 of a two-layer LDM system.

ERP (Effective Radiated Power) - the amount of power provided to a transmission line and antenna system minus the system losses and times the antenna gain. This is also the power level that the FCC authorizes for a broadcast facility.

ESG (Electronic Service Guide) - in ATSC 3.0, a file, likely delivered in non-real-time, that informs the viewer with a graphical guide about the contents of services available at any time, as well as how to access to those services.

EVM (Error Vector Magnitude) (sometimes also called Receive Constellation Error or RCE) - a measure (expressed in dB or %) of how far the transmitted and received constellation points are from the ideal locations.

Exciter/Modulator - in an ATSC 3.0 television transmitter, the functional block that contains the Input Formatter, Bit Interleaving and Coding, Framing and Interleaving as well as Waveform Generation.

FDM (Frequency Division Multiplexing) or OFMD (Orthogonal Frequency Division Multiplexing) - a modulation scheme that divides and carries a single digital signal (or its components) across thousands of signal carriers simultaneously. The OFDM carriers are sent at right angles to each other (hence, orthogonal) so they do not interfere with each other.

FEC (Forward Error Correction) - the process whereby additional (redundant) bits are added to a digital transmission that allows a receiver to detect bit errors and correct the signal using the redundant data.

FEL (Future Extension Layer) - an extension layer for an LDM system.

FFT (Fast Fourier Transform) **-** a process that mathematically converts a signal from its original time domain to a representation in the frequency domain.

FPGA (Field-Programmable Gate Array) - a high-density general-purpose integrated circuit that can be programmed to achieve specific signal processing tasks.

Frame - a data construct that includes a sequence of bits or symbols that indicate to the receiver the beginning and end of payload data.

FTP (File Transfer Protocol) - a standard network protocol used to transfer files between a client and server.

Futureproof - a system designed in such a way that it is unlikely to become obsolete.

Geolocation - a process or technique of identifying the geographical device location of a viewer by means of digital information, using various means such as GPS location or IP address (in the case of broadband connection).

GI (Guard Interval) - used to introduce immunity to propagation delays, echoes, and reflections. ATSC 3.0 has 12 user selectable GI lengths (192, 384, 512, 768, 1024, 1536, 2048, 2432, 3072, 3648, 4096, and 4864).

GUI (Graphical User Interface) - a type of user interface that allows users to interact with electronic devices through the use of graphical icons and visual indicators.

H.264 (also known as AVC or MPEG-4 Part 10, Advanced Video Coding) - a block-oriented motion-compensation-based video compression standard that is currently one of the most commonly used formats for the distribution of video content, that provides about twice the data bandwidth efficiency of MPEG-2.

H.265 (also known as High Efficiency Video Coding (HEVC) or MPEG-H Part 2) - a block-oriented motion-compensation-based video compression standard that is one of several potential successors to the widely-used H.264 or MPEG-4 Part 10, while providing nearly twice the bandwidth efficiency.

HDR (High Dynamic Range) - a technique used in video imaging to reproduce a greater dynamic range of luminosity than is possible with more standard digital imaging techniques or displays.

HD-SDI (High-Definition Serial Digital Interface) - the common method for high-definition digital video production and studio transmission of Y'CbCr component content, and is described in standard SMPTE 292M at a nominal data rate of 1.485 Gb/s.

HEVC (High Efficiency Coding) (also known as H.265 or MPEG-H Part 2) - a block-oriented motion-compensation-based video compression standard that is one of several potential successors to the widely-used H.264 or MPEG-4 Part 10, while providing nearly twice the bandwidth efficiency.

HFR (High Frame Rate) - television frame rates above the nominal rates of 60 frames in the U.S. and 50 frames in many other parts of the world. The higher frame rates would be 120 Hz (U.S.) or 100 Hz (elsewhere).

Hpol (Horizontal Polarization) - when an antenna has its electric field transmitted in the horizontal plane and the magnetic field in vertical plane.

HTI (Hybrid Time Interleaver) - a means by which the data is pseudo-randomized to reduce the negative effects of random noise bursts in a transmission system that utilizes the multiple-PLP mode. It is composed of cell interleaver, twisted block interleaver, and a convolutional delay-line.

HTTP (HyperText Transport Protocol) - an application or protocol for distributing hypermedia information using hyperlinks (addresses) to link from one hypertext file to another location or file.

HVAC (Heating Ventilation and Cooling) - the technology of controlling indoor environmental qualities of temperature and humidity.

Hybrid Service - in ATSC 3.0, a capability to make use of simultaneous over-the-air broadcast as well as delivery and return channel content via the internet. The internet-delivered content would presumably augment or be in addition to the over-the-air content.

IFFT (Inverse Fast Fourier Transform) - the process that mathematically converts a signal from its original frequency domain to a representation in the time domain. IFFT takes place in the waveform generation processing block of the ATSC 3.0 exciter/modulator.

Immersive (as in audio) - provides a realistic representation of the original sound field that appears to surround the user. Often referred to as theatre-quality sound.

IMSC1 (Internet Media Subtitles and Captions Version 1 or MSC-1) - the W3C standard on which ATSC 3.0's caption and subtitle system is built.

Interlace – in television, the form of scanning in which an image is fully horizontally scanned at one half the frame rate, and alternately fully scanned again between the original scan locations, making up the full frame.

Internet Protocol (IP) - the digital *protocol* by which data is sent from one device to another via the internet or a network. Each source of data has at least one or more *IP* addresses that uniquely identifies it from all other data sources. Destination devices often have IP addresses as well to be uniquely identified or addressed. However, the protocol also makes provision for "broadcast" data in which only the source address is required.

I.O.T. (Inductive Output Tube) - a type of high-power linear beam vacuum tube that uses current modulation that is primarily used in UHF transmitters. Developed in the 1980s, IOTs provide an alternative technology to klystrons, providing greater efficiency and lower operating costs.

IP V4 (Internet Protocol Version 4) - the fourth revision of the Internet Protocol (IP) definition, and a widely used protocol in data communication over different types of networks.

IP V6 (Internet Protocol Version 6) - the sixth revision of the Internet Protocol (IP) definition, and a widely used protocol in data communication over different types of networks. IP V6 is the enhanced version of IP V4, and can support very large numbers of nodes as compared to IP V4.

IPTV (Internet Protocol Television) - a system through which television services are delivered using Internet Protocol over packet-switched networks, as in the internet.

ISDB-T (Integrated Services Digital Broadcasting, Terrestrial) - a Japanese standard for digital television. ISDB-T replaced the previously used MUSE Hi-vision analog HDTV system.

ISO/BMFF (ISO/IEC 14496-12 - MPEG-4 Part 12) - a general structure for time-based multimedia files such as video and audio. It is designed as a flexible, extensible format that facilitates interchange, management, editing and presentation of the media. It is designed to be independent of any particular network protocol.

ISO/IEC 23008-1 - specifies MPEG Media Transport (MMT) technologies, which include a single encapsulation format, delivery protocols and signaling messages for transport and delivery of multimedia data over packet-switched networks.

ITU Rec. 709 (also known as BT.709) - standardizes the format of high-definition television, having 16:9 (widescreen) aspect ratio with a defined transfer function and color space definition.

ITU Rec. 2020 (also known as BT2020) - defines various aspects of HDTV such as improved display resolution, frame rate, Chroma subsampling, bit depth, and color space over ITU Rec. 709.

L1 Basic - part of the Preamble following the "bootstrap," and carries the most fundamental signaling information as well as data necessary to decode L1 Detail.

L1 Detail - part of the Preamble following the L1 Basic. It has the information necessary to decode subframes including their ModCods, number of PLPs, pilot pattern, FEC, etc.

Layer - a conceptual model that characterizes and standardizes the communication functions of a data system while isolating it from the technology utilized. Such a model partitions the system into abstraction (independent) layers.

LCT (Layer Coding Transport) (also known as RFC 5651) - provides transport level support for content delivery and stream delivery protocols such as ROUTE/DASH or ROUTE/UDP/IP. LCT is specifically designed to support protocols using IP multicast, but it also provides support to protocols that use unicast.

LDM (Layered Division Multiplexing) - a multiplexing scheme where multiple RF signals are layered on top of one another. A two-layer system has a core layer (more robust ModCod) and an enhanced layer (less robust ModCod). The enhanced layer is "injected" between -3 and -10dB relative to the core layer.

LDPC (Low-Density Parity Check) - a linear error correcting code, used in the BICM processing block for inner code correction. Inner code correction is mandatory in ATSC 3.0. There are two different sizes of the LDPC code: 64800 bits and 16200 bits.

Lighthouse Station - a method by which, during the industry transition to ATSC 3.0, multiple stations in a market will transmit ATSC 3.0 services on a single designated channel, using separate

PLPs or stamux on a single PLP. This would facilitate a transition in a market because viewers could still view the stations' ATSC-1 transmissions while transitioning to ATSC-3.

LLS (Low Level Signaling) - signaling information that supports rapid channel scans and bootstrapping of service acquisition by the receiver. It operates below the IP layer, and includes a table that points to the Service List Table (SLT), Regional Ratings Table (RRT), System Time (ST), Common Alerting Protocol (CAP), and Service Layer Signaling (SLS) tables.

LMT (Link Mapping Table) - provides a table or list of the upper layer sessions by IP address carried in a PLP.

MIMO (Multiple Input Multiple Output) - one of three frame types (SISO, MISO, MIMO). MIMO improves system robustness via additional spatial diversity (two transmit, two receive antennas). The spatial diversity is often combined with polarization diversity (Hpol and Vpol).

MISO (Multiple Input Single Output) - one of three frame types (SISO, MISO, MIMO). MISO is a pre-distortion technique that artificially de-correlates signals from multiple transmitters in a Single Frequency Network in order to minimize potential destructive interference.

MMTP (MultiMedia Transport Protocol) - an application layer transport protocol for delivering multimedia streams over IP networks

ModCod (Modulation and Code Rate) - the combination of modulation and coding rates that together determine the size of the baseband packet.

MPEG-2 TS (Motion Picture Expert Group-2 Transport Stream) **-**a digital container format for streaming television signals that is part of the MPEG-2 Part 1 specification.

MPEG-H (Motion Picture Experts Group-High efficiency coding and media delivery in heterogeneous environments) - a group of standards that includes next-generation audio and video compression technologies.

Network Layer Packet - an elemental Packet Structure that provides payload content along with its routing information.

NGA (Next Generation Audio) - audio provided in a highly efficient digitally compressed format that delivers immersive quality audio, along with a host of features such as customized channel selection control.

Nightlight Station - a concept by which, when the ATSC-3 transition is fairly mature and all of the stations have transitioned to ATSC-3, a single station transmits a multiplex of all of the stations in the market in ATSC-1 as to not orphan legacy receiver viewers.

NOC (Network Operations Center) - the facility that contains the system resource manager, data sources/program encoders, and the broadcast gateway. The NOC may also be called master control in many facilities.

NRT (Non-Real Time) - in ATSC 3.0, the concept of delivering file content or applications non-contemporaneously (generally before) with their intended use.

NUC (Non-Uniform Constellation) - an OFDM QAM constellation with a non-uniform spread of the constellation points. Such constellations provide additional shaping gain, which allows reception at lower signal-to-noise ratios.

Null Fill - an antenna phasing design used to fill in signal coverage in areas of the pattern that do not have desired signal strength.

OC3 (Optical Carrier 3) - a network line with a transmission data rate of up to 155.52 Mbit/s using primarily fiber optics. OC-3 may also be known as STS-3 or STM-1.

OFDM (Orthogonal Frequency Division Multiplexing) - a digital multi-carrier modulation method that uses a large number of closely spaced carriers, 90 degrees apart, that are used to carry complex data that has been converted from the frequency to the time domain.

Offloading - where data, video and other bandwidth-intensive content can be transmitted over broadcast networks for "edge" storage or delivery to non-household destinations, freeing required bandwidth for other uses.

OSI (7 Layer Model) - the model which defines a networking framework to implement protocols in seven layers. Those layers are Physical (Layer 1), Data Link (Layer 2), Network (Layer 3), Transport (Layer 4), Session (Layer 5), Presentation (Layer 6), and Application (Layer 7). Each layer is an abstraction (independent) layer that provides for extensibility by not relying on the characteristics of other layers. This allows for the separation of requirements to facilitate interoperability and platform independence. ATSC 3.0 is built on just such an architecture.

OTA (Over-The-Air) - programs directly received from a local transmission.

OTT (Over-The-Top) - television programming, streams or multimedia services received via methods other than over-the-air, without the involvement of a multiple-system operator in the control or distribution of the content. The term originated from the concept of receiving the streams "over-the-top" of cable television broadband connectivity. However, the term has since broadened to include television delivery via internet broadband in general.

PAPR (Peak-to-Average Power Reduction or PAR) - a transmitter's peak power squared divided by the average (RMS) power squared and is expressed generally in dB.

PAPR Reduction - modifies the ODFM signal via Tone Reservation (TR) and/or Active Constellation Extension (ACE) to reduce the peak power requirements of the ATSC 3.0 transmission.

PLP (Physical Layer Pipe) - a logical data transmission channel that may carry one or multiple services. Each PLP can have different bit rate and error protection parameters. It provides a data and transmission structure of allocated capacity and robustness that can be adjusted to broadcaster needs. In ATSC 3.0, the maximum number of PLPs in an RF channel is 64. Each individual service can utilize up to 4 PLPs. Therefore, receivers are expected to be able to decode at least four PLPs at one time.

PNG (Portable Network Graphics) - a raster graphics file format that supports lossless data compression. PNG is the most commonly used lossless image compression format on the internet.

Preamble - present at the beginning of an ATSC 3.0 frame or group of subframes. It contains the Level 1 control signaling applicable to the remainder of the frame(s). The preamble has two parts: L1 Basic and L1 Detail.

Progressive - in television, a scanning method that scans the frame completely in one pass.

PSIP (Program System Information Protocol) - in ATSC 1.0, a collection of tables describing virtual channel attributes, event features, and other information. The complete specification is described in ATSC standard A/65.

QAM (Quadrature Amplitude Modulation) - a signal in which two carriers shifted in phase by 90 degrees are modulated, summed and the resultant output consists of both amplitude and phase variations. In the ATSC 3.0 physical layer, constellations resulting from QAM modulation range by broadcaster choice from QPSK to 4096QAM. High spectral efficiencies can be achieved with QAM by setting a suitable constellation size, limited only by the noise level and linearity of the channel required.

QPSK (Quadrature Phase Shift Keying) - a digital modulated signal consisting of a two-bit (4 point, or quadrature) QAM constellation that is usually used for low bit rate, high robust transmission.

RAP (Random Access Point) - a randomly selected (non-sequential) location in a digital signal that is used as a reference location for synchronizing a process.

Repack - will be the ultimate result of the FCC's spectrum incentive reverse-auction in 2016/2017 to buy spectrum from broadcasters that will, in turn, be sold to wireless operators in a forward auction. With the resultant consolidated spectrum set aside for television broadcast, some stations will need to move to a different part of the band to clear the sold spectrum for wireless use.

Return Channel - in ATSC 3.0, a data transmission link from a viewer's receiver back to the broadcaster's facility. The return channel in ATSC 3.0 may use the internet or an RF transmission channel.

ROI (Return on Investment) - the amount of monetary *return* relative to the *investment's* cost.

ROUTE (Real-time Object delivery over Unidirectional Transport) - an IP-centric transport protocol that is compatible with layered environments and is based on IETF protocols. In ATSC 3.0, it is used to carry a DASH session of multimedia content.

RTP (Real-time Protocol) - a network protocol for delivering audio and video over IP networks. RTP is used extensively in communication and entertainment systems that involve streaming media and is described in IETF RFC-3550.

Scheduler - a functional processing block within the Broadcast Gateway, at the master control or NOC, that allocates physical capacity for the services required by the broadcaster in ATSC 3.0 transmissions.

Service - a set of content elements, when taken together, which provide a complete listening, viewing, or other experience to a viewer. It may contain audio, base level video, enhancement video, captioning, graphic overlays, web pages, applications, emergency alerts as well as other signaling, or metadata required.

Service Guide - in ATSC 3.0, a file, likely delivered in non-real-time, that informs the viewer in a graphical manner about the contents of services available at any time, as well as how to access those services.

SFN (Single Frequency Network) - two or more transmitters operating on the same channel in a synchronized manner, generally to improve transmission coverage.

SISO (Single Input Single Output) - one of three frame types (SISO, MISO, MIMO). SISO is signal processing with only one transmit antenna and only one receive antenna required for full reception.

SLS (Service Layer Signaling) - provides to the receiver sufficient information to discover and access ATSC 3.0 services and their content components.

SLT (Service List Table) - in ATSC, it enables the ATSC 3.0 receiver to build a basic service list while pointing to the location of the SLS (Service Layer Signaling).

SMPTE 2016-1- the SMPTE standard for Active Field Descriptor, which is a standard set of codes that can be sent in a video stream or in the baseband video signal that carries information about the aspect ratio, as well as the screen rendering characteristics required.

SMPTE 2022-1- Forward Error Correction for Real-Time Video/Audio Transport over IP Networks. It also defines row/column FEC (Forward Error Correction) for IP video streams. The row/column FEC works by grouping IP video packets into logical rows and columns, and then appends one FEC packet to each row and each column.

SNR (Signal to Noise Ratio) - compares the level of a desired signal to the level of background noise. It is defined as the ratio of signal power to the noise power, often expressed in decibels. In digital communication systems, quantization errors are a common source of the noise.

SMPTE-TT - defines the SMPTE profile of W3C Timed Text Markup Language (TTML) used to transmit Captions or Subtitles. It identifies the features from TTML required for interoperability between display systems for the format. SMPTE-TT also defines some standard metadata terms to be used, and some extension features not found in TTML.

Soundbar - a single cabinet speaker system with a small footprint, built with small phased speakers that can simulate surround-sound.

Spatial - in video encoding, those items, errors or corrections that occur within a frame.

Spectrum Repack - will be the result of the FCC's spectrum incentive reverse auction in 2016/2017 to buy spectrum from television stations, then sell the purchased and consolidated spectrum to wireless providers. When this process is complete, some television stations will need to move to a different part of the band to clear this spectrum for the wireless use.

SSC (Spatial Scalable Coding) - enables the encoding of a high-quality video bitstream that contains one or more subset bitstreams that can themselves be decoded with a reconstruction quality somewhat similar to that of the original bitstream. The subset bitstream is derived by dropping packets from the larger bitstream. The subset bitstream can represent a lower spatial resolution (smaller screen), or a lower temporal resolution (lower frame rate), compared to the original bitstream.

STA (Special Temporary Authority) - under FCC rules, provides for immediate operation for broadcast station's transmission when temporary authority is required because licensed facilities have been damaged or experimental transmission is requested.

STL (Studio to Transmitter Link) - the transmission link between the broadcaster's studio location and the transmitter, carrying the station's content to be transmitted. This link may be via radio means (microwave) or via direct digital connection, such as fiber.

STLTP (Studio to Transmitter Link Transport Protocol) - In ATSC 3.0, provides a STL transmission interface between the Broadcast Gateway, located at the studio, and the transmitter(s) exciter/modulator. It encapsulates payload data using UDP, provides synchronization time data and control, as well as STL forward error correction.

Subframe - in ATSC 3.0, a PLP may contain a structure of a frame or a series of subframes. Each subframe may have separate transmission characteristics. There is a bootstrap sequence and preamble is found at the beginning of each frame or series of subframes.

Sweetspot - in multichannel audio, describes the focal point between multiple speakers, where an individual is fully capable of hearing the stereo audio mix in a way it was intended to be heard.

TCP/IP (Transport Control Protocol via Internet Protocol) - the basic communication language or protocol of the internet or other IP-based delivery systems, as in a private network. It requires two-direction (duplex) connectivity.

TDM (Time Domain Multiplex) - a method of joining multiple data streams into a single stream by dividing the source streams into many timed segments, each of short time duration, and interleaving them into the common stream. The individual data streams can then be reassembled at the receiving end by reversing the process, based on the timed segment duration.

Temporal - in video encoding, those items, errors or corrections that occur between frames.

Tone Reservation - in COFDM transmission, a method for reducing Peak to Average Power by adding (reserving) subcarriers (tones) that don't carry any data information, for the purpose of reducing PAPR.

TPO (Transmitter Power Output) - the actual amount of RF power that a transmitter produces at its output connection.

Transcript File - a transcription or translation of the dialogue text, sound effects, relevant musical cues, and other relevant audio information in text form, used to create a closed captioning file.

Transfer Function - in television, is used to mathematically describe what the response of an optical sensor is to a wide range of light levels. There is rarely a linear light-to-signal output relationship, so for the imagery to be properly rendered, the display device must emulate the inverse transfer function.

TTML (Timed Text Markup Language) - a W3C-developed closed-captioning data-delivery standard. CFF-TT (Common File Format Timed Text) is based on TTML with SMPTE-TT extensions.

UDP (User Datagram Protocol) - a data delivery standard, defined by RFC 768, that delivers its payload as datagrams *(*header and payload sections) to devices on an IP network. UDP provides checksums for data integrity, and port numbers for addressing different functions. There are no handshaking dialogues, and thus UDP can be used in single-direction communications.

UHD (Ultra High Definition) - a descriptor of the highest technical quality for television programming, which includes 4K resolution, high display refresh rate, High Dynamic Range, Wide Color Gamut, and immersive audio.

VOD (Video On Demand) - an interactive TV technology that allows subscribers to view programming in real time or download programs to view later.

Vpol (Vertical Polarization) - when an antenna has its electric field transmitted in the vertical plane and the magnetic field in the horizontal plane.

W3C (World Wide Web Consortium) - an international community where member organizations, a full-time staff, and the public work together to develop standards to be used on the World Wide Web.

WCR (Wide Color Gamut) - a wider range of color values that are closer to the human visual range than prior color descriptions. The television wide-gamut color space is defined in ITU Rec. 2020 that covers 75.8% of the visual color space. The color space currently used in television ITU Rec. 709 covers only 35.9% of the visual color space by comparison.

Y'CbCr - a family of color space used in video systems. Y' is the Luma component and Cb and Cr are the blue and red Chroma color difference signals. The prime on the "Y" is to distinguish Luma from Luminance. Luma differs from the scientific term Luminance, which does not have the gamma (transfer function) correction found in Luma as is used in television imagery.

NextGen TV Application Procedure

PUBLIC NOTICE

Federal Communications Commission
445 12th St., S.W.
Washington, D.C. 20554

News Media Information 202 / 418-0500
Internet: https://www.fcc.gov
TTY: 1-888-835-5322

DA 19-453

Released: May 23, 2019

MEDIA BUREAU ANNOUNCES THAT IT WILL BEGIN ACCEPTING NEXT GENERATION TELEVISION (ATSC 3.0) LICENSE APPLICATIONS IN THE COMMISSION'S LICENSING AND MANAGEMENT SYSTEM ON MAY 28, 2019

GN Docket No. 16-42

1. By this Public Notice, the Media Bureau (Bureau) announces that it will accept applications for Next Generation Television (Next Gen TV or ATSC 3.0) licenses through the Commission's Licensing and Management System (LMS) beginning on **May 28, 2019**. On November 16, 2017, the Commission adopted rules authorizing television broadcasters to use the Next Gen TV transmission standard on a voluntary, market-driven basis;[1] however, before accepting applications for Next Gen TV licenses, the Bureau needed to revise the Form 2100 and modify LMS to accommodate the filing of such applications. This work has now been completed. The Bureau has revised FCC Form 2100, Schedule B (full service television stations), Schedule D (low power and television translator stations), and Schedule F (Class A television stations), so that broadcasters may now file applications for modification of licenses to authorize the transmission of Next Gen TV broadcast signals. All licensed full power, Class A, low power television (LPTV), and TV Translator stations, with the exception of licensed channel sharing stations,[2] may begin filing the Next Gen TV license applications in LMS beginning on May 28, 2019.

---

[1] *Authorizing Permissive Use of the "Next Generation" Broadcast Television Standard*, GN Docket No. 16-142, Report and Order and Further Notice of Proposed Rulemaking, 32 FCC Rcd 9930 (2017) (*Next Gen TV Report and Order and FNPRM*).

[2] With respect to licensed channel sharing stations, the Bureau is in the process of completing the necessary changes in LMS for these stations to use the new forms and has established an interim process that will

2. In addition to reviewing this Public Notice, applicants are encouraged to review the Commission's *Next Gen TV Report and Order* and the Commission's ATSC 3.0 rules prior to filing a license application in order to familiarize themselves with requirements for airing an ATSC 1.0 simulcast signal and providing ATSC 3.0 service.[3] Such requirements include, but are not limited to the Commission's local simulcasting requirement,[4] the requirement to enter into written local simulcasting agreements,[5] ATSC 1.0 simulcast and ATSC 3.0 signal coverage requirements, and viewer and MVPD notice requirements. LMS filing instructions are provided in the attached Appendix.

3. ***ATSC 3.0 Streamlined Licensing Application Process***. The Commission has adopted a one-step streamlined licensing approach that differs from the Commission's traditional broadcast licensing process.[6] Under this streamlined licensing approach, a broadcaster interested in voluntarily transmitting an ATSC 3.0 signal from its authorized facility or the facility of another broadcaster is required to file only a modification of license application with the Commission.[7] A station must file and receive Commission approval, prior to: (1) moving its ATSC 1.0 simulcast signal to a temporary ATSC 1.0 simulcast host station,

---

allow such stations to deploy ATSC 3.0 services immediately as well. Additional details about the interim application process for channel sharing stations is provided below.

[3] *See generally Next Gen TV Report and Order and FNPRM*, 32 FCC Rcd 9930 (2017); 47 CFR § 73.3801 et. seq. (full power television simulcasting during the ATSC 3.0 transition); 47 CFR § 73.6029 (Class A television simulcasting during the ATSC 3.0 transition); 47 CFR § 74.782 (LPTV and TV Translator simulcasting during the ATSC 3.0 Transition).

[4] Under the Commission's rules, LPTV and TV Translators are exempt from the local simulcasting requirement. 47 CFR § 74.782(b). This exemption is currently subject to a pending Petition for Reconsideration. Petition for Reconsideration of American Television Alliance, GN Docket No. 16-142, at 5-8 (filed Mar. 6, 2019), https://ecfsapi.fcc.gov/file/10305036256436/ATVA%20Petition%20for%20Recon%203-5.pdf. Furthermore, the Commission has sought comment on whether to exempt NCE and/or Class A stations (as a class) from the Commission's local simulcasting requirement or adopt a presumptive waiver standard for such stations. *Next Gen TV Report and Order and FNPRM*, 32 FCC Rcd at 9989-90, paras. 122-25. During the pendency of the Petition and FNPRM, LPTV and TV Translators continue to be exempt from the simulcasting requirement and both Class A and all full power stations (including NCE stations) are required, absent a request for waiver, to comply with the Commission's local simulcasting requirement. 47 CFR §§ 73.3801(b) (full power local simulcasting requirement) and 73.6026(b) (Class A local simulcasting requirement); *see Next Gen TV Report and Order and FNPRM*, 32 FCC Rcd at 9940-41, para. 18 (discussing waiver of local simulcasting requirement); 47 CFR § 1.3 (waiver for good cause shown).

[5] When adopting its rules, the Commission used the rules for channel sharing agreements as a model. *Next Gen TV Report and Order and FNPRM*, 32 FCC Rcd at 9942, para. 21. As such, we find it is appropriate, as in channel sharing, not to require that commonly owned stations enter into or maintain written simulcast agreements. *Channel Sharing by Full Power and Class A Stations Outside the Broadcast Television Spectrum Incentive Auction Context*, Second Order on Reconsideration, GN Docket No. 12-268 and MB Docket No. 15-137, 30 FCC Rcd. 12016, 12019, n.20 ("An applicant that intends to channel share with a commonly-owned or controlled sharer station does not need to enter into or file a CSA."). However, if additional stations later become part of the simulcast arrangement that are not commonly owned, all stations must enter into a written simulcast agreement.

[6] *See Next Gen TV Report and Order and FNPRM*, 32 FCC Rcd at 9953-85, paras. 48-59; 47 CFR §§ 73.3801(f), 73.6029(f), 74.782(g).

[7] *Next Gen TV Report and Order and FNPRM*, 32 FCC Rcd at 9956, para. 57.

moving its ATSC 1.0 simulcast signal to a different host station, or discontinuing an ATSC 1.0 simulcast signal;[8] (2) commencing the airing of a ATSC 3.0 signal on an ATSC 3.0 host station that has already converted to 3.0 service, moving its 3.0 signal to a different ATSC 3.0 host station, or discontinuing an ATSC 3.0 guest signal on an ATSC 3.0 host station; or (3) converting a station that has transitioned its facility to broadcast in ATSC 3.0 back to ATSC 1.0 service.[9] A station may commence ATSC 1.0 simulcast or ATSC 3.0 operations only after grant of the necessary applications and consistent with any other restrictions placed on the station by the Commission. Stations are not permitted to commence ATSC 3.0 service (including ATSC 3.0 guest service) or ATSC 1.0 simulcast service pursuant to automatic program test authority.[10]

4. When applying for a Next Gen TV license an applicant must choose from one of six application purposes. Based on a licensee's selection, questions in the application will be tailored to the station's specific purpose for filing.[11] The six purposes a licensee must choose from are as follows:

- Purpose 1: Convert an existing ATSC 1.0 facility to ATSC 3.0 service and identify an ATSC 1.0 simulcast host.
    - Who Files: A station commencing ATSC 3.0 service by converting their existing ATSC 1.0 facility to ATSC 3.0 and either identifying a host station for their ATSC 1.0 simulcast signal or seeking waiver of the ATSC 1.0 simulcast requirement.[12]
- Purpose 2: Identify or change an ATSC 1.0 simulcast host station.

---

[8] We note that all Class A and full power stations are required to comply with the ATSC 1.0 local simulcasting requirement. Thus, the only circumstance in which a Class A or full-power station would be permitted to discontinue ATSC 1.0 service, would be pursuant to an approved waiver. *See supra* note 4. In addition, we note that although LPTV and TV translator stations are exempt from the local simulcasting requirement, should they decide to provide an ATSC 1.0 simulcast signal on a voluntary basis, they would use the license application process described herein in the event they decide to discontinue simulcasting. *See infra* notes 12 and 15.

[9] A "host" station is the station whose facilities are being used to transmit programming originated by another station ("guest"). A "guest" station is the station that is licensed to use another station's facilities ("host") to transmit its programming. For example, in a reciprocal simulcasting arrangement between Station A and Station B in which Station A will convert to and operate in ATSC 3.0 format, and Station B will continue to operate in ATSC 1.0 format, Station A will be the 3.0 host station for Station B's guest 3.0 signal and Station B will be the 1.0 host simulcasting host station for Station A's guest ATSC 1.0 simulcast signal. A station that airs an ATSC 3.0 signal (guest or host) is a "Next Gen TV Broadcaster."

[10] *Next Gen TV Report and Order and FNPRM*, 32 FCC Rcd. at 9956, para. 56 and n.152.

[11] Based on an applicant's circumstance, LMS will automatically hide from view inapplicable questions.

[12] As noted above, LPTV and TV translator stations are exempt from the local simulcasting requirement and may elect to transition directly to ATSC 3.0 service without providing an ATSC 1.0 simulcast signal. 47 CFR § 74.782(b). If an LPTV or TV translator station elects to voluntarily air an ATSC 1.0 simulcast signal, its ATSC 1.0 simulcast signal must comply with the general requirements applicable to ATSC 1.0 simulcast signals and will be asked to provide information as part of its application relevant to its ATSC 1.0 simulcast signal. 47 CFR § 74.782(c). All Class A and full power stations are required, absent waiver, to comply with the ATSC 1.0 local simulcasting requirement. *See supra* note 4. We note that the Commission has also sought additional comment on whether to provide additional guidance on the Commission should evaluate requests for waiver of the local simulcasting requirement. *Next Gen TV Report and Order and FNPRM*, 32 FCC Rcd at 9989-90, paras. 123-24.

- Who Files: A station that has converted their facility to ATSC 3.0 and is seeking to either (1) change its ATSC 1.0 simulcast host or (2) identify a host for an ATSC 1.0 simulcast signal after having commenced ATSC 3.0 service without initially identifying an ATSC 1.0 simulcast host.[13]

- Purpose 3: Identify or change an ATSC 3.0 host station.
  - Who Files: A station seeking to either (1) commence ATSC 3.0 service by identifying a host station for their ATSC 3.0 guest signal or (2) change its existing ATSC 3.0 host station.
- Purpose 4: Discontinue ATSC 3.0 guest service.
  - Who Files: A station seeking to discontinue ATSC 3.0 guest service currently being aired on an ATSC 3.0 host station and not commence ATSC 3.0 guest service on a new ATSC 3.0 host station at this time.
- Purpose 5: Convert an ATSC 3.0 facility back to ATSC 1.0 service.
  - Who Files: A stations seeking to convert its licensed ATSC 3.0 station back to ATSC 1.0 service. A station converting back to ATSC 1.0 service need not file a separate application to discontinue their ATSC 1.0 simulcast signal (if applicable).[14]
- Purpose 6: Discontinue ATSC 1.0 simulcast service on a host station.[15]
  - Who Files: Stations seeking to discontinue ATSC 1.0 simulcast service currently being aired on an ATSC 1.0 simulcast host station and not commence ATSC 1.0 simulcast service on a new ATSC 1.0 simulcast host station.

5. Depending on a station's current licensed status, only certain purposes will be available for an applicant to select. For example, a station that is currently operating in ATSC 1.0 and does not have an ATSC 3.0 signal will only be permitted to select Purpose 1 (convert its existing facility to ATSC 3.0 and, as applicable, establish an ATSC 1.0 simulcast host) or Purpose 3 (identify an ATSC 3.0 host station).

6. An ATSC 1.0 simulcast host station does not need to file any application to act as an ATSC 1.0 simulcast host so long as the station's facilities would not require any technical changes that would otherwise necessitate the filing of an application for construction permit. Likewise, a station that has already filed for, and been granted, a license to convert its facility to provide ATSC 3.0 service need not file any application to act as an ATSC 3.0 host station. However, if a host station must modify its facilities in a

---

[13] In order to have commenced ATSC 3.0 operation without an ATSC 1.0 simulcast host the station must either be an LPTV/TV Translator station or be a full power or Class A station that was granted a waiver of the local simulcasting rule. *See supra* notes 4 and 8.

[14] Any ATSC 3.0 guests must also file an application under Purpose 4 in order to discontinue their ATSC 3.0 guest service or file under Purpose 3 to change their ATSC 3.0 host station.

[15] This purpose applies to LPTV and TV Translator stations that voluntarily established an ATSC 1.0 simulcast signal and are seeking to permanently cease operation of an ATSC 1.0 simulcast signal. Any full power or Class A station that selects this purpose must include with its application a request for waiver of the local simulcasting requirement for evaluation by Bureau staff. Absent grant of a waiver, full power and Class A stations are required to provide an ATSC 1.0 local simulcasting signal. *See supra* notes 4 and 8.

manner that would otherwise require the filing of an application for construction permit, the host station must first apply for and upon grant make all necessary changes to its facilities before a guest station may file an application for modification of license to air an ATSC 1.0 simulcast signal or ATSC 3.0 guest signal over the host's facilities.[16]

7. ***Temporary ATSC 3.0 Application Process for Channel Sharing Stations***. The Bureau continues to modify LMS in order to accept for filing Next Gen TV license applications for channel sharing stations. We anticipate those modifications will be complete by the end of Third Quarter of 2019. We will release a subsequent Public Notice announcing when channel sharing stations may commence filing Next Gen TV license applications using Form 2100. In the meantime, the Bureau will use a temporary process by which channel sharing stations may file for authority either to convert their existing facility to ATSC 3.0 (and air an ATSC 1.0 simulcast signal) or air an ATSC 3.0 guest signal by filing for special temporary authority (STA) using a Legal STA. Included with any Legal STA must be all information that would otherwise be required to be included in an applicant's Next Gen TV license application, as detailed in the Commission's *Next Gen TV Report and Order* and the Commission's ATSC 3.0 rules. Channel sharing stations that file using this interim process will need to file a license application once LMS has been modified to accept those applications for filing. For additional information, channel sharing stations that are interested in commencing ATSC 3.0 service under this interim process should contact the appropriate member of the Bureau staff listed in paragraph 9 below.

8. ***Stations with Next Gen TV Experimental Authorizations***. While the Bureau was in the process of revising its forms and updating LMS to accept the filing of ATSC 3.0 license applications, the Bureau granted several applications for Experimental Special Temporary Authority to allow stations to commence ATSC 3.0 market trials and engage in product development. Effective May 28, 2019, the Bureau will no longer grant new experimental authorizations or extend existing authorizations, absent unique and compelling circumstances. Stations with experimental authorizations must file a Next Gen TV license application in LMS no later than the expiration date of their current experimental authorization or by that date permanently cease ATSC 3.0 service and as applicable resume ATSC 1.0 service. In order to avoid interruption of service, we advise stations with experimental authorizations to file their Next Gen TV license applications at least 30 days prior to the expiration date to allow sufficient time for staff to process the application.

9. For additional information related to technical matters, please contact Hossein Hashemzadeh of the Video Division, Media Bureau at (202) 418-1658 or by e-mail at Hossein.Hashemzadeh@fcc.gov concerning Class A and LPTV stations, or Kevin Harding of the Video Division, Media Bureau at 202-418-7077 or by e-mail at Kevin.Harding@fcc.gov concerning full power stations. For all legal matters, please contact Evan Morris of the Media Bureau at 202-418-1656 or by e-mail

[16] *See* 47 CFR §§73.3801(f)(3)-(4), 73.6029(f)(3)-(4), 74.782(g)(3)-(4). *See also* 47 CFR §§ 73.1690, 74.751, and 74.787. For example, a licensee that wants to operate a single frequency network (SFN) under the Commission's Distributed Transmission System (DTS) rules must first file the appropriate construction permit application to modify its existing facility. After its DTS facility is constructed, the licensee would then file an application for license to cover, and upon grant of that application the licensee (as well as any ATSC 3.0 guests) could file the appropriate ATSC 3.0 application(s). If an ATSC 1.0 simulcast host station also plans air an ATSC 3.0 signal on that of its simulcast partner, then an ATSC 1.0 simulcast host station must separately file an application for modification of license to establish an ATSC 3.0 guest station.

at Evan.Morris@fcc.gov. Press inquiries should be directed to Janice Wise at (202) 418-8165 or by email at Janice.Wise@fcc.gov. TTY: (202) 418-7172 or (888) 835-5322.

-FCC-

APPENDIX

INSTRUCTIONS FOR ACCESSING AND FILING ON LMS

General LMS Log-in Instructions

1. Access the LMS applicant data entry home page here: https://enterpriseefiling.fcc.gov/dataentry/login.html
2. Log-in using the FRN associated with the station.
3. For more information and help using the LMS system, contact: (877) 480-3201 TTY, or (717) 338-2824.

Instructions for Filing Next Gen License Applications

FCC Form 2100 – Schedule B (Full Power), Schedule D (LPTV) or Schedule F (Class A) (Application for License)

1. Click on "Authorizations" tab on the left top of the page.
2. Click on license authorization.
3. Click on "File an Application" button.
4. Select "modification of license" from drop down menu.
5. Select Next Gen ATSC 3.0 from drop down menu.
6. Select the appropriate "purpose" from drop down menu
7. Complete the application and click "Submit."

* Applicants must pay the requisite filing fee where applicable.

Instructions for Filing Legal STA Applications (Channel Sharing Stations Only)

1. Click on “Facility” tab on the left top of the page.
2. Click on facility ID.
3. Click on “File an application”
4. Select “Legal STA Request” from drop down menu.
5. Complete the application and click “Submit”.

* Applicants must pay the requisite filing fee where applicable.

47 CFR 73.3801 Full Power Television Simulcasting During the ATSC 3.0 (NextGen TV) Transition

§ 73.3801

(a) ***Simulcasting arrangements.*** For purposes of compliance with the simulcasting requirement in paragraph (b) of this section, a full power television station may partner with one or more other full power stations or with one or more Class A, LPTV, or TV translator stations in a simulcasting arrangement for purposes of airing either an ATSC 1.0 or ATSC 3.0 signal on a host station's (*i.e.,* a station whose facilities are being used to transmit programming originated by another station) facilities. Noncommercial educational television stations may participate in simulcasting arrangements with commercial stations.

(1) A full power television station airing an ATSC 1.0 or ATSC 3.0 signal on the facilities of a Class A host station must comply with the rules governing power levels and interference applicable to Class A stations, and must comply in all other respects with the rules and policies applicable to full power television stations set forth in this part.

(2) A full power television station airing an ATSC 1.0 or ATSC 3.0 signal on the facilities of a low power television or TV translator host station must comply with the rules of part 74 of this chapter governing power levels and interference applicable to low power television or TV translator stations, and must comply in all other respects with the rules and policies applicable to full power television stations set forth in this part.

(3) A full power noncommercial educational television (NCE) station airing an ATSC 1.0 or ATSC 3.0 signal on the facilities of a commercial television host station must comply with the rules applicable to NCE licensees.

(b) ***Simulcasting requirement.*** A full power television station that chooses to air an ATSC 3.0 signal must simulcast the primary video programming stream of that signal in an ATSC 1.0 format. This requirement does <u>not</u> apply to any multicast streams aired on the ATSC 3.0 channel.

(1) The programming aired on the ATSC 1.0 simulcast signal must be "substantially similar" to that aired on the ATSC 3.0 primary video programming stream. For purposes of this section, "substantially similar" means that the programming must be the same except for advertisements, promotions for upcoming programs, and programming features that are based on the enhanced capabilities of ATSC 3.0. These enhanced capabilities include:

(i) Hyper-localized content (e.g., geo-targeted weather, targeted emergency alerts, and hyper-local news):

(ii) Programming features or improvements created for the ATSC 3.0 service (e.g., emergency alert "wake up" ability and interactive program features);

(iii) Enhanced formats made possible by ATSC 3.0 technology (e.g., 4K or HDR); and

(iv) Personalization of programming performed by the viewer and at the viewer's discretion. (2) For purposes of paragraph (b)(1) of this section, programming that airs at a different time on the ATSC 1.0 simulcast signal than on the primary video programming stream of the ATSC 3.0 signal is not considered "substantially similar."

(c) ***Coverage requirements for the ATSC 1.0 simulcast signal.*** For full power broadcasters that elect temporarily to relocate their ATSC 1.0 signal to the facilities of a host station for purposes of deploying ATSC 3.0 service (and that convert their existing facilities to ATSC 3.0), the ATSC 1.0 simulcast signal must continue to cover the station's entire community of license (*i.e.,* the station must choose a host from whose transmitter site the Next Gen TV station will continue to meet the community of license signal requirement over its current community of license, as required by § 73.625) and the host station must be assigned to the same Designated Market Area (DMA) as the originating station (*i.e.,* the station whose programming is being transmitted on the host station).

(d)***Coverage requirements for ATSC 3.0 signals.*** For full power broadcasters that elect to continue broadcasting in ATSC 1.0 on the station's existing facilities and transmit an ATSC 3.0 signal on the facilities of a host station, the ATSC 3.0 signal must be established on a host station assigned to the same DMA as the originating station.

(e) ***Simulcasting agreements.***

(1) Simulcasting agreements must contain provisions outlining each licensee's rights and responsibilities regarding:

(i) Access to facilities, including whether each licensee will have unrestrained access to the host station's transmission facilities;

(ii) Allocation of bandwidth within the host station's channel;

(iii) Operation, maintenance, repair, and modification of facilities, including a list of all relevant equipment, a description of each party's financial obligations, and any relevant notice provisions;

(iv) Conditions under which the simulcast agreement may be terminated, assigned or transferred; and

(v) How a guest station's (***i.e.,*** a station originating programming that is being transmitted using the facilities of another station) signal may be transitioned off the host station.

(2) Broadcasters must maintain a written copy of any simulcasting agreement and provide it to the Commission upon request.

(f) ***Licensing of simulcasting stations and stations converting to ATSC 3.0 operation.***

(1) Each station participating in a simulcasting arrangement pursuant to this section shall continue to be licensed and operated separately, have its own call sign, and be separately subject to all applicable Commission obligations, rules, and policies. ATSC 1.0 and ATSC 3.0 signals aired on the facilities of a host station will be licensed as temporary second channels of the originating station. The Commission will include a note on the originating station's license

identifying any ATSC 1.0 or ATSC 3.0 signal being aired on the facilities of a host station. The Commission will also include a note on a host station's license identifying any ATSC 1.0 or ATSC 3.0 guest signal(s) being aired on the facilities of the host station.

(2) ***Application required.*** A full power broadcaster must file an application (FCC Form 2100) with the Commission, and receive Commission approval, before:

(i) Moving its ATSC 1.0 signal to the facilities of a host station, moving that signal from the facilities of an existing host station to the facilities of a different host station, or discontinuing an ATSC 1.0 guest signal;

(ii) Commencing the airing of an ATSC 3.0 signal on the facilities of a host station (that has already converted to ATSC 3.0 operation), moving its ATSC 3.0 signal to the facilities of a different host station, or discontinuing an ATSC 3.0 guest signal; or

(iii) Converting its existing station to transmit an ATSC 3.0 signal or converting the station from ATSC 3.0 back to ATSC 1.0 transmissions.

(3) ***Streamlined process.*** With respect to any application in paragraph (f)(2) of this section, a full power broadcaster may file only an application for modification of license, provided no other changes are being requested in such application that would require the filing of an application for a construction permit as otherwise required by the rules (*see, e.g.,*§ 73.1690).

(4) ***Host station.*** A host station must first make any necessary changes to its facilities before a guest station may file an application to air a 1.0 or 3.0 signal on such host.

(5) ***Expedited processing.*** An application filed in accordance with the streamlined process in paragraph (f)(3) of this section will receive expedited processing provided, for stations requesting to air an ATSC 1.0 signal on the facilities of a host station, the station will provide ATSC 1.0 service to at least 95 percent of the predicted population within the noise limited service contour of its original ATSC 1.0 facility.

(6) ***Required information.***

(i) An application in paragraph (f)(2) of this section must include the following information:

(A) The station serving as the host, if applicable;

(B) The technical facilities of the host station, if applicable;

(C) The DMA of the originating broadcaster's facility and the DMA of the host station, if applicable; and

(D) Any other information deemed necessary by the Commission to process the application.

(ii) If an application in paragraph (f)(2) of this section includes a request to air an ATSC 1.0 signal on the facilities of a host station, the broadcaster must, in addition to the information in paragraph (f)(6)(i), also indicate on the application:

(A) The predicted population within the noise limited service contour served by the station's original ATSC 1.0 signal;

(B) The predicted population within the noise limited service contour served by the station's original ATSC 1.0 signal that will lose the station's ATSC 1.0 service as a result of the simulcasting arrangement, including identifying areas of service loss by providing a contour overlap map; and

(C) Whether the ATSC 1.0 simulcast signal aired on the host station will serve at least 95 percent of the population in paragraph (f)(6)(ii)(A) of this section.

(iii)

(A) If an application in paragraph (f)(2) of this section includes a request to air an ATSC 1.0 signal on the facilities of a host station and does not meet the 95 percent standard in paragraph (f)(6)(ii) of this section, the application must contain, in addition to the information in paragraphs (f)(6)(i) and (ii) of this section, the following information:

(1) Whether there is another possible host station(s) in the market that would result in less service loss to existing viewers and, if so, why the Next Gen TV broadcaster chose to partner with a host station creating a larger service loss;

(2) What steps, if any, the station plans to take to minimize the impact of the service loss (e.g., providing ATSC 3.0 dongles, set-top boxes, or gateway devices to viewers in the loss area); and

(3) The public interest benefits of the simulcasting arrangement and a showing of why the benefit(s) of granting the application would outweigh the harm(s).

(B) These applications will be considered on a case-by-case basis.

(g) ***Consumer education for Next Gen TV stations.***

(1) Commercial and noncommercial educational stations that relocate their ATSC 1.0 signals (e.g., moving to a host station's facility, subsequently moving to a different host, or returning to its original facility) are required to air daily Public Service Announcements (PSAs) or crawls every day for 30 days prior to the date that the stations will terminate ATSC 1.0 operations on their existing facilities. Stations that transition directly to ATSC 3.0 will be required to air daily PSAs or crawls every day for 30 days prior to the date that the stations will terminate ATSC 1.0 operations.

(2) ***PSAs.*** Each PSA must be provided in the same language as a majority of the programming carried by the transitioning station and be closed-captioned.

(3) ***Crawls.*** Each crawl must be provided in the same language as a majority of the programming carried by the transitioning station.

(4) ***Content of PSAs or crawls.*** For stations relocating their ATSC 1.0 signals or transitioning directly to ATSC 3.0, each PSA or crawl must provide all pertinent information to consumers.

(h)*Notice to MVPDs.*

(1) Next Gen TV stations relocating their ATSC 1.0 signals (e.g., moving to a temporary host station's facility, subsequently moving to a different host, or returning to its original facility) must provide notice to MVPDs that:

(i) No longer will be required to carry the station's ATSC 1.0 signal due to the relocation; or

(ii) Carry and will continue to be obligated to carry the station's ATSC 1.0 signal from the new location.

(2) The notice required by this section must contain the following information:

(i) Date and time of any ATSC 1.0 channel changes;

(ii) The ATSC 1.0 channel occupied by the station before and after commencement of local simulcasting;

(iii) Modification, if any, to antenna position, location, or power levels;

(iv) Stream identification information; and

(v) Engineering staff contact information.

(3) If any of the information in paragraph (h)(2) of this section changes, an amended notification must be sent.

(4)

(i) Next Gen TV stations must provide notice as required by this section:

(A) At least 120 days in advance of relocating their ATSC 1.0 signals if the relocation occurs during the post-incentive auction transition period; or

(B) At least 90 days in advance of relocating their ATSC 1.0 signals if the relocation occurs after the post-incentive auction transition period (***see*** 47 CFR 27.4).

(ii) If the anticipated date of the ATSC 1.0 signal relocation changes, the station must send a further notice to affected MVPDs informing them of the new anticipated date.

(5) Next Gen TV stations may choose whether to provide notice as required by this section either by a letter notification or electronically via email if the relevant MVPD agrees to receive such notices by email. Letter notifications to MVPDs must be sent by certified mail, return receipt requested to the MVPD's address in the FCC's Online Public Inspection File (OPIF), if the MVPD has an online file. For cable systems that do not have an online file, notices must be sent to the cable system's official address of record provided in the system's most recent filing in the FCC's Cable Operations and Licensing System (COALS). For MVPDs with no official address in OPIF or COALS, the letter must be sent to the MVPD's official corporate address registered with their State of incorporation.

[Feb. 2, 2018]

74.782 Low Power Television and TV Translator Simulcasting During the ATSC 3.0 (NextGen TV) Transition

§ 74.782

(a) ***Simulcasting arrangements.*** While broadcasters are voluntarily deploying ATSC 3.0, a low power television (LPTV) or TV translator station may partner with one or more other LPTV or TV translator stations or with one or more full power or Class A stations in a simulcasting arrangement for purposes of airing either an ATSC 1.0 or ATSC 3.0 signal on a host station's (*i.e.,* a station whose facilities are being used to transmit programming originated by another station) facilities.

(1) An LPTV or TV translator station airing an ATSC 1.0 or ATSC 3.0 signal on the facilities of a full power host station must comply with the rules of part 73 of this chapter governing power levels and interference, and must comply in all other respects with the rules and policies applicable to low power television or TV translator stations set forth in this part.

(2) An LPTV or TV translator station airing an ATSC 1.0 or ATSC 3.0 signal on the facilities of a Class A host station must comply with the rules governing power levels and interference applicable to Class A television stations, and must comply in all other respects with the rules and policies applicable to LPTV or TV translator stations as set forth in Part 74 of this chapter.

(b) ***Simulcasting requirement.*** An LPTV or TV translator station that elects voluntarily to simulcast while broadcasters are voluntarily deploying ATSC 3.0 must simulcast the primary video programming stream of their ATSC 3.0 signal in an ATSC 1.0 format. This requirement does not apply to any multicast streams aired on the ATSC 3.0 channel.

(1) The programming aired on the ATSC 1.0 simulcast signal must be "substantially similar" to that aired on the ATSC 3.0 primary video programming stream. For purposes of this section, "substantially similar" means that the programming must be the same except for advertisements, promotions for upcoming programs, and programming features that are based on the enhanced capabilities of ATSC 3.0. These enhanced capabilities include:

(i) Hyper-localized content (e.g., geo-targeted weather, targeted emergency alerts, and hyper-local news):

(ii) Programming features or improvements created for the ATSC 3.0 service (e.g., emergency alert "wake up" ability and interactive program features);

(iii) Enhanced formats made possible by ATSC 3.0 technology (e.g., 4K or HDR); and

(iv) Personalization of programming performed by the viewer and at the viewer's discretion.

(2) For purposes of paragraph (b)(1) of this section, programming that airs at a different time on the ATSC 1.0 simulcast signal than on the primary video programming stream of the ATSC 3.0 signal is not considered "substantially similar."

(c) ***Transitioning directly to ATSC 3.0.*** LPTV and TV translator stations may transition directly from ATSC 1.0 to ATSC 3.0 operation without simulcasting.

(d) ***Coverage requirements for the ATSC 1.0 simulcast channel.*** For LPTV and TV translator stations that elect voluntarily to simulcast and temporarily to relocate their ATSC 1.0 signal to the facilities of a host station for purposes of deploying ATSC 3.0 service (and that convert their existing facilities to ATSC 3.0), the station:

(1) Must maintain overlap between the protected contour of its existing facilities and its ATSC 1.0 simulcast signal;

(2) May not relocate its ATSC 1.0 simulcast signal more than 30 miles from the reference coordinates of the relocating station's existing antenna location; and

(3) Must select a host station assigned to the same Designated Market Area as the originating station (*i.e.,* the station whose programming is being transmitted on the host station).

(e) ***Coverage requirements for ATSC 3.0 signals.*** For LPTV and TV translator stations that elect voluntarily to simulcast and to continue broadcasting in ATSC 1.0 from the station's existing facilities and transmit an ATSC 3.0 signal from a host location, the ATSC 3.0 signal must be established on a host station assigned to the same DMA as the originating station.

(f) ***Simulcasting agreements.***

(1) Simulcasting agreements must contain provisions outlining each licensee's rights and responsibilities regarding:

(i) Access to facilities, including whether each licensee will have unrestrained access to the host station's transmission facilities;

(ii) Allocation of bandwidth within the host station's channel;

(iii) Operation, maintenance, repair, and modification of facilities, including a list of all relevant equipment, a description of each party's financial obligations, and any relevant notice provisions;

(iv) Conditions under which the simulcast agreement may be terminated, assigned or transferred; and

(v) How a guest's station's (*i.e.,* a station originating programming that is being transmitted using the facilities of a host station) signal may be transitioned off the host station.

(2) LPTV and TV translators must maintain a written copy of any simulcasting agreement and provide it to the Commission upon request.

(g) ***Licensing of simulcasting stations and stations converting to ATSC 3.0 operation.***

(1) Each station participating in a simulcasting arrangement pursuant to this section shall continue to be licensed and operated separately, have its own call sign, and be separately

subject to all applicable Commission obligations, rules, and policies. ATSC 1.0 and ATSC 3.0 signals aired on the facilities of a host station will be licensed as temporary second channels of the originating station. The Commission will include a note on the originating station's license identifying any ATSC 1.0 or ATSC 3.0 signal being aired on the facilities of a host station. The Commission will also include a note on a host station's license identifying any ATSC 1.0 or ATSC 3.0 guest signal(s) being aired on the facilities of the host station.

(2) ***Application required.*** An LPTV or TV translator broadcaster must file an application (FCC Form 2100) with the Commission, and receive Commission approval, before:

(i) Moving its ATSC 1.0 signal to the facilities of a host station, moving that signal from the facilities of an existing host station to the facilities of a different host station, or discontinuing an ATSC 1.0 guest signal;

(ii) Commencing the airing of an ATSC 3.0 signal on the facilities of a host station (that has already converted to ATSC 3.0 operation), moving its ATSC 3.0 signal to the facilities of a different host station, or discontinuing an ATSC 3.0 guest signal; or

(iii) Converting its existing station to transmit an ATSC 3.0 signal or converting the station from ATSC 3.0 back to ATSC 1.0 transmissions.

(3) ***Streamlined process.*** With respect to an application in paragraph (g)(2) of this section, an LPTV or TV translator broadcaster may file only an application for modification of license provided no other changes are being requested in such application that would require the filing of an application for a construction permit as otherwise required by the rules (*see, e.g.,*§§ 74.751 and 74.787).

(4) ***Host station.*** A host station must first make any necessary changes to its facilities before a guest station May file an application to air a 1.0 or 3.0 signal on such host.

(5) ***Expedited processing.*** An application filed in accordance with the streamlined process in paragraph (g)(3) of this section will receive expedited processing provided, for LPTV and TV translator stations seeking voluntarily to simulcast and to air an ATSC 1.0 signal on the facilities of a host station, the station will provide ATSC 1.0 service to at least 95 percent of the predicted population within the protected contour of its original ATSC 1.0 facility.

(6) ***Required information.***

(i) An application in paragraph (g)(2) of this section must include the following information:

(A) The station serving as the host, if applicable;

(B) The technical facilities of the host station, if applicable;

(C) The DMA of the originating broadcaster's facility and the DMA of the host station, if applicable; and

(D) Any other information deemed necessary by the Commission to process the application.

(ii) If an application in paragraph (g)(2) of this section includes a request to air an ATSC 1.0 signal on the facilities of a host station, the LPTV or TV translator broadcaster must also indicate on the application:

(A) The predicted population within the protected contour served by the station's original ATSC 1.0 signal;

(B) The predicted population within the protected contour served by the station's original ATSC 1.0 signal that will lose the station's ATSC 1.0 service as a result of the simulcasting arrangement, including identifying areas of service loss by providing a overlap map; and

(C) Whether the ATSC 1.0 simulcast signal aired on the host station will serve at least 95 percent of the population in paragraph (g)(6)(ii)(A) of this section.

(iii) If an application in paragraph (g)(2) of this section includes a request to air an ATSC 1.0 signal on the facilities of a host station and does not meet the 95 percent standard in paragraph (g)(6)(ii) of this section, the application must contain, in addition to the information in paragraphs (g)(6)(i) and (ii) of this section, the following information:

(A) Whether there is another possible host station(s) in the market that would result in less service loss to existing viewers and, if so, why the Next Gen TV broadcaster chose to partner with a host station creating a larger service loss;

(B) What steps, if any, the station plans to take to minimize the impact of the service loss (e.g., providing ATSC 3.0 dongles, set-top boxes, or gateway devices to viewers in the loss area); and

(C) The public interest benefits of the simulcasting arrangement and a showing of why the benefit(s) of granting the application would outweigh the harm(s). These applications will be considered on a case-by-case basis.

(h) ***Consumer education for Next Gen TV stations.***

(1) LPTV and TV translator stations that elect voluntarily to simulcast and that relocate their ATSC 1.0 signals (e.g., moving to a host station's facilities, subsequently moving to a different host, or returning to its original facility) will be required to air daily Public Service Announcements (PSAs) or crawls every day for 30 days prior to the date that the stations will terminate ATSC 1.0 operations on their existing facilities. LPTV and TV translator stations that transition directly to ATSC 3.0 will be required to air daily Public Service Announcements (PSAs) or crawls every day for 30 days prior to the date that the stations will terminate ATSC 1.0 operations.

(2) ***PSAs.*** Each PSA must be provided in the same language as a majority of the programming carried by the transitioning station and be closed-captioned.

(3) ***Crawls.*** Each crawl must be provided in the same language as a majority of the programming carried by the transitioning station.

(4) ***Content of PSAs or crawls.*** For stations relocating their ATSC 1.0 signals or transitioning directly to ATSC 3.0, each PSA or crawl must provide all pertinent information to consumers.

(i)***Notice to MVPDs.***

(1) Next Gen TV stations relocating their ATSC 1.0 simulcast signals (e.g., moving to a temporary host station's facilities, subsequently moving to a different host, or returning to its original facility) must provide notice to MVPDs that:

(i) No longer will be required to carry the station's ATSC 1.0 signal due to the relocation; or

(ii) Carry and will continue to be obligated to carry the station's ATSC 1.0 signal from the new location.

(2) The notice required by this section must contain the following information:

(i) Date and time of any ATSC 1.0 channel changes;

(ii) The ATSC 1.0 channel occupied by the station before and after commencement of local simulcasting;

(iii) Modification, if any, to antenna position, location, or power levels;

(iv) Stream identification information; and

(v) Engineering staff contact information.

(3) If any of the information in paragraph (f)(2) of this section changes, an amended notification must be sent.

(4)

(i) Next Gen TV stations must provide notice as required by this section:

(A) At least 120 days in advance of relocating their ATSC 1.0 simulcast signals if the relocation occurs during the post-incentive auction transition period; or

(B) At least 90 days in advance of relocating their 1.0 simulcast signals if the relocation occurs after the post-incentive auction transition period.

(ii) If the anticipated date of the ATSC 1.0 service relocation changes, the station must send a further notice to affected MVPDs informing them of the new anticipated date.

(5) Next Gen TV stations may choose whether to provide notice as required by this section either by a letter notification or electronically via email if the relevant MVPD agrees to receive such notices by email. Letter notifications to MVPDs must be sent by certified mail, return receipt requested to the MVPD's address in the FCC's Online Public Inspection File (OPIF), if the MVPD has an online file. For cable systems that do not have an online file, notices must be sent to the cable system's official address of record provided in the system's most recent filing in the FCC's Cable Operations and Licensing System (COALS). For MVPDs with no official address in

OPIF or COALS, the letter must be sent to the MVPD's official corporate address registered with their State of incorporation

Frequently Asked Questions

Will a need a new transmitter be required if I am hosting the Lighthouse station?

It will depend on several factors. Many current transmitters in use with ATSC-1 are completely capable of transmitting the NextGen TV signal. However, NextGen TV's COFDM transmission system can provide transient power demands beyond what is required by equivalent legacy ATSC-1 average transmission power. This is referred to as a high peak to average power ratio. It is a characteristic of COFDM transmission. Also, the broadcaster may choose to add additional power to provide for a vertical polarized transmission component that will become important in reaching a mobile audience. Many legacy transmitters already have enough power overhead to handle these peaks and additional power requirements. However, each circumstance is different so these factors must be considered when designing your system.

Does a broadcaster need a new exciter (modulator) if hosting a Lighthouse station?

Legacy ATSC-1 exciters/modulators generally are not compatible with current NextGen TV transmission unless they have been purchased in the last year or two. More recent exciters are software=based and can run software to create a legacy ATSC-1 or alternatively a NextGen TV transmission often with the addition of a license key.

Will a Studio to Transmitter link need to be replaced if hosting the Lighthouse station?

The output of the Broadcast/Gateway Scheduler used in NextGen TV is UDP Multicast Internet Protocol. Therefore, you should have a Studio to Transmitter link connection that can carry an IP, UDP, Multicast of 50 mb/sec or more to accommodate the NextGen TV with its signaling and Forward Error Correction data overhead.

What is the purpose of a Single Frequency Network (SFN) and should I consider building one?

A Single Frequency Network or SFN is a means by which a broadcaster can use several smaller transmitters within their designated FCC transmission contour on their FCC allotted channel instead of just a single transmitter. This provides a means to improve and provide more consistent signal power levels within the broadcaster's transmission area that enhances over-the-air reception. In addition, a properly designed SFN could provide a means to use a more aggressive modulation and coding parameters in NextGen TV and thus increase usable bandwidth.

What is DTS?

DTS or Distributed Transmission System is an alternative designation or term used for SFN that is used particularly by the Federal Communications Commission.

Why are there so many transmission parameter selections available in NextGen TV?

In designing the ATSC-3 NextGen TV system, the designers were aware of the wide range of transmission characteristics that need to be provided by a modern television transmission system. This variety of possible parameters allow flexible use of the service from in-home, portable, mobile, in-vehicle and inside large building requirements. All the different transmission parameters provide capabilities from more robust mobile or inside building transmission to less robust, with wider bandwidth capabilities. NextGen TV also allows for transmission of multiple modulation and coding parameters at the same time which provides the flexibility to transmit to multiple levels of service bandwidth or signal robustness within a single transmission.

How much flexibility is available in the FCCs requirement to simulcast your legacy ATSC-1 and NextGen TV service?

In keeping with the current FCC rule in this regard a Broadcaster must simulcast the primary video programming stream of their NextGen TV signal in ATSC 1.0 format. This same requirement does not apply to any multicast streams

The programming aired on the simulcast signal must be "substantially similar" to that aired on the primary NextGen TV video programming stream. Substantially similar means that the programming must be the same except for advertisements, promotions for upcoming programs, and programming features that are based on the enhanced capabilities of NextGen TV. These enhanced capabilities include:

- Hyper-localized content (e.g., geo-targeted weather, targeted emergency alerts, and hyper-local news)
- Programming features or improvements created for the NextGen TV service (e.g., emergency alert "wake up" ability and interactive program features)
- Enhanced formats made possible by the NextGen TV technology (e.g., 4K or HDR)
- Personalization of programming performed by the viewer and at the viewer's discretion.
- Programming that airs at a different time on the simulcast signal than on the primary video programming stream of the NextGen TV signal is not considered "substantially similar."

How long does it take to receive license modifications required to move the Lighthouse host ATSC-1 services as well as to build and air a NextGen TV service?

The FCC has indicated that they desire to provide license modification approvals of Form 2100 in their LMS within thirty days. However, each application has a mandated 120-day MVPD

notification period (during the repack period) before the move of the new transmissions can take place. After the repack, the notification period is 90 days.

Why must you provide a 120-day notification to local market MVPDs before moving to Next Gen TV?

Although many MVPDs receive a broadcaster's signal to their head-ends via fiber, they will generally provide backup reception from over-the-air transmission. Some systems do the opposite of using OTA as primary and fiber as backup. If the legacy services move from the Lighthouse Host channel to share facilities with other legacy stations, it creates a complicated technical requirement for the MVPDs in the way the OTA signals are multiplexed in a different manner on versus via their fiber connectivity.

Making this technical change for most MVPDs is a very complex and potentially a lengthy process.

What is hybrid NextGen TV, and should a broadcaster consider its use?

Hybrid NextGen TV allows a portion of the service to be delivered via broadband /Internet while other portions of the service are delivered via traditional broadcast. This capability requires the viewer to own an Internet-connected television receiver. Luckily, a very large portion of new NextGen TV receivers will have Internet connection capability.

There are many possibilities in this hybrid use case from alternative audio sources (as in home and away sports commentators) to enhanced web application content that would deliver alternative advertisements or background content associated with the viewed programming.

As broadcasters' capabilities grow in NextGen TV it can also be used for DVR type capabilities, like restart (the programming from the beginning) or even to repair interrupted portions of the OTA signal..

Should you consider the use of a broadcaster application and what is the Application Framework framework?

NextGen TV has the capability of automatically downloading and running a broadcaster-provided application on the viewer's receiver. This application can be simple and just provide a familiar receiver control interface to the viewer or it can provide a wide range of enhanced contents such as a sophisticated guide with deep links to enhance the viewer experience.

A (common) Application Framework is a means by which much of the underlying software code that makes this experience possible is shared between broadcasters to provide faster app loading between a service change as well as providing a common as well as familiar look and feel to viewer-facing broadcaster app.

What is Content Protection and why is it an option in NextGen TV?

We are in an age in which there are justified concerns about content piracy as well as unauthorized duplication of program content. So, the developers of NextGen TV included a means of protecting content within the standard. This capability is called Content Protection. Turning on this capability is at the option of the broadcaster, but likely will be required by many content creators and producers. NextGen TV receivers will have the capability to decrypt a Content Protected services without viewer intervention.

What is High Dynamic Range and Wide Color Gamut?

The dynamic range (darkest portion compared to brightest portion of image) that can be perceived by the human eye/brain in a single image is around 14 to16 f-stops. An f-stop is a term used in photography to denote a doubling or halving of a given light level from one location in an image to another. Standard dynamic range video images with a conventional gamma (display transfer) curve and a bit depth of 10-bits per sample has a dynamic range of about 10 f-stops. High Dynamic Range video which is supported in NextGen TV covers a much larger range of contrast values approaching that of the human eye's perception capability. However, the actual range displayed is always determined by the highest brightness capability of the display used. High Dynamic range displays vary in their brightness capability. In any case an HDR display provides spectacular images that provide greater viewer positive response that improving image resolution.

The current ATSC-1 television service can cover only a relatively narrow range (around 50%) of all the colors that can be perceived by a human eye/brain. Luckily, the human brain fills in what might appear to be missing. The grass looks green in the image, but maybe not the precise green of the actual grass.

However, using modern television production equipment and displays, a wider range of colors (70-80%) can be transmitted and displayed. NextGen TV supports a Wider Color Gamut (range or scope) when provided by the broadcaster.

What immersive audio found in NextGen TV?

The current ATSC-1 Television systems uses the Dolby AC-3 audio standard and can deliver up to 5.1 channels of audio.

The ATSC-3 NextGen TV system in North America uses the more capable AC-4 system which can support up to 13 channels of discrete audio as in 7.2+4 to provide a more accurate or immersive form of audio rendition not unlike what is found in modern movie theatres. Additionally, a special form of audio rendition called ambisonics is included in the standard. Ambisonics is a full-sphere

surround sound format above and beyond sound in a horizontal plane. Ambisonics reproduces sound sources above and below the listener. Unlike other multichannel surround formats, its transmission channels do not describe speaker signals or channels per se, but create realistic imagery of the sound as might be heard in a real-world situation despite the number of speakers used.

What is Dialogue Enhancement in NextGen TV?

The Dolby AC-4 audio system used in NextGen TV in North America can create and provide an audio dialogue enhancement feature. This feature allows viewers that have receivers with this selection capability to improve the ability of the listener to understand the dialogue within a program source. It does not just increase the dialogue level; it also changes the characteristics of the dialogue within the program to make it easier to discern by the viewer.

This feature was not added just for the hearing-impaired community. It was added to enhance the viewer experience in a wide range of viewing/listening circumstances where background noise in the program (as in a sporting event) or at the viewer's location can mask the intelligibility dialogue.

This feature has proven to be very popular in early test by a wide range of test audience members.

REFERENCE

Document Revision History

VERSION	DATE
NextGenTV Host Station Manual Version 1a	10/9/19
NextGenTV Host Station Manual Version 2	10/21/19
NextGenTV Host Station Manual Version 3	12/19/19
NextGenTV Host Station Manual Version 3a	01/04/20
NextGenTV Host Station Manual Version 4	01/04/20
NextGenTV Host Station Manual Version 5	03/03/20
NextGenTV Host Station Manual Version 6	03/23/20

.